CBU

DATA SHEETS

AUGUST 1970

TABLE OF CONTENTS (Revised)

TYPE OF MUNITIONS	NAME	SUBMUNITION	PAGE
DISPENSER AND BOMB, AIRCRAFT	CBU-1/A	BLU-4/B	1
DISPENSER AND BOMB, AIRCRAFT	CBU-1A/A	BLU-4A/B	3
DISPENSER AND BOMB, AIRCRAFT	CBU-2/A	BLU-3/B	5
DISPENSER AND BOMB, AIRCRAFT	CBU-2A/A	BLU-3/B	7
DISPENSER AND BOMB, AIRCRAFT	CBU-2B/A	BLU-3/B	9
DISPENSER AND BOMB, AIRCRAFT	CBU-2C/A	BLU-3/B	11
DISPENSER AND BOMB, AIRCRAFT	CBU-3/A	BLU-7/B	13
DISPENSER AND BOMB, AIRCRAFT	CBU-3A/A	BLU-7A/B	15
DISPENSER AND BOMB, AIRCRAFT	CBU-7/A	BLU-18/B	17
DISPENSER AND BOMB, AIRCRAFT	CBU-8/A	BDU-27/B (Practice)	19
DISPENSER AND BOMB, AIRCRAFT	CBU-8A/A	BDU-40/B (Practice)	21
DISPENSER AND BOMB, AIRCRAFT	CBU-9/A	BDU-28/B (Dummy)	23
DISPENSER AND BOMB, AIRCRAFT	CBU-9A/A	BDU-28/B (Dummy)	25
DISPENSER AND BOMB, AIRCRAFT	CBU-9B/A	BDU-28/B (Dummy)	27
DISPENSER AND BOMB, AIRCRAFT	CBU-12/A	BLU-17/B (WP)	29
DISPENSER AND BOMB, AIRCRAFT	CBU-12A/A	BLU-17/B (WP)	31
DISPENSER AND BOMB, AIRCRAFT	CBU-14/A	BLU-3/B	33
DISPENSER AND BOMB, AIRCRAFT	CBU-14A/A	BLU-3/B	35
DISPENSER AND BOMB, AIRCRAFT	CBU-15/A	BLU-19/B23 (GB)	37
DISPENSER AND BOMB, AIRCRAFT	CBU-17/A	BDU-34/B (Dummy)	39
DISPENSER AND BOMB, AIRCRAFT	CBU-22/A	BLU-17/B (WP)	41
DISPENSER AND BOMB, AIRCRAFT	CBU-22A/A	BLU-17/B (WP)	43
DISPENSER AND BOMB, AIRCRAFT	CBU-24A/B	BLU-26/B	45
DISPENSER AND BOMB, AIRCRAFT	CBU-24/B	BLU-26/B	47
DISPENSER AND BOMB, AIRCRAFT	CBU-24/B (Mod)	BLU-26/B	49
DISPENSER AND BOMB, AIRCRAFT	CBU-24B/B	BLU-26/B	51
DISPENSER AND BOMB, AIRCRAFT	CBU-24C/B	BLU-26/B	53
DISPENSER AND BOMB, AIRCRAFT	CBU-25/A	BLU-24/B	55
DISPENSER AND BOMB, AIRCRAFT	CBU-25A/A	BLU-24/B	57
DISPENSER AND BOMB, AIRCRAFT	CBU-25B/A	BLU-24B/B	59
DISPENSER AND BOMB, AIRCRAFT	CBU-26/A	BDU-37/B (Practice)	61
DISPENSER AND BOMB, AIRCRAFT	CBU-29A/B	BLU-36/B	63
DISPENSER AND BOMB, AIRCRAFT	CBU-29/B	BLU-36/B	65
DISPENSER AND BOMB, AIRCRAFT	CBU-29/B (Mod)	BLU-36/B	67
DISPENSER AND BOMB, AIRCRAFT	CBU-29B/B	BLU-36/B	69
DISPENSER AND BOMB, AIRCRAFT	CBU-29C/B	BLU-36/B	71
DISPENSER AND MINE, AIRCRAFT	CBU-33/A	BLU-45/B (Mine)	73
DISPENSER AND MINE, AIRCRAFT	CBU-34/A	BLU-42/B (Mine)	75
DISPENSER AND MINE, AIRCRAFT	CBU-34A/A	BLU-42A/B (Mine)	77

TABLE OF CONTENTS (Revised)

TYPE OF MUNITIONS	NAME	SUBMUNITION	PAGE
DISPENSER AND BOMB, AIRCRAFT	CBU-38/A	BLU-49/B	79
DISPENSER AND MINE, AIRCRAFT	CBU-42/A	BLU-54/B (Mine)	81
DISPENSER AND BOMB, AIRCRAFT	CBU-46/A	BLU-66/B	83
DISPENSER AND BOMB, AIRCRAFT	CBU-49A/B	BLU-59/B	85
DISPENSER AND BOMB, AIRCRAFT	CBU-49/B (Mod)	BLU-59/B	87
DISPENSER AND BOMB, AIRCRAFT	CBU-49B/B	BLU-59/B	89
DISPENSER AND BOMB, AIRCRAFT	CBU-49C/B	BLU-59/B	91
DISPENSER AND BOMB, AIRCRAFT	CBU-52/B	BLU-61/B	93
DISPENSER AND BOMB, AIRCRAFT	CBU-63/B	M40 Grenade	95
DISPENSER AND MINE, AIRCRAFT	SUU-41B/A (CDU-4/B)	XM41E1 Mine	97
DISPENSER AND MINE, AIRCRAFT	SUU-41B/A (CDU-5/B	XM40E5 Mine	99
DISPENSER AND MINE, AIRCRAFT	SUU-41B/A (CDU-10/B)	XM40E5 and XM44 Mines	101
DISPENSER AND MINE, AIRCRAFT	SUU-41B/A (CDU-14/B)	XM65 Mine	103
ADAPTER, BOMB CLUSTER	ADU-253A/B	BLU-3/B	105
ADAPTER, BOMB CLUSTER	ADU-253/B	BLU-3/B	107
ADAPTER, BOMB CLUSTER	ADU-253B/B	BLU-3/B	109
ADAPTER, BOMB CLUSTER	ADU-256A/B	M40 Grenade	111
ADAPTER, BOMB CLUSTER	ADU-256/B	M40 Grenade	113
ADAPTER, BOMB CLUSTER	ADU-256B/B	M40 Grenade	115
ADAPTER, BOMB CLUSTER	ADU-272A/B	BLU-26/B	117
ADAPTER, BOMB CLUSTER	ADU-272/B	BLU-26/B	119
ADAPTER, BOMB CLUSTER	ADU-272B/B	BLU-26/B	121
ADAPTER, BOMB CLUSTER	ADU-285A/B	BLU-36/B	123
ADAPTER, BOMB CLUSTER	ADU-285B/B	BLU-36/B	125
CLUSTER BOMB	MK 15 MOD 0	M40 Grenade	127
CLUSTER BOMB	MK 18 MOD 0	Dummy Test Vehicle	129
CLUSTER BOMB	MK 19 MOD 0	Fuze M219 Test Vehicle	131
CLUSTER BOMB	MK 21 MOD 0	XM38 and M40 Grenade	133
CLUSTER BOMB	MK 22 MOD 0	M38 Grenade	135
RELOAD KIT	CBU-42/A	BLU-54/B Mine	137
WARHEAD SECTION, GUIDED MISSILE, HE	AGM-12/E	BLU-26/B, BLU-36/B	139
WARHEAD SECTION, GUIDED MISSLE, HE	AGM-12/E	BLU-26/B, BLU-59/B	141

CONTENTS

	Page
DISPENSER AND BOMB, AIRCRAFT: CBU-1/A	1
DISPENSER AND BOMB, AIRCRAFT: CBU-1A/A	3
DISPENSER AND BOMB, AIRCRAFT: CBU-2/A	5
DISPENSER AND BOMB, AIRCRAFT: CBU-2A/A	7
DISPENSER AND BOMB, AIRCRAFT: CBU-2B/A	9
DISPENSER AND BOMB, AIRCRAFT: CBU-2C/A	11
DISPENSER AND BOMB, AIRCRAFT: CBU-3/A	13
DISPENSER AND BOMB, AIRCRAFT: CBU-3A/A	15
DISPENSER AND BOMB, AIRCRAFT: CBU-7/A	17
DISPENSER AND BOMB, AIRCRAFT: CBU-8/A	19
DISPENSER AND BOMB, AIRCRAFT: CBU-8A/A	21
DISPENSER AND BOMB, AIRCRAFT: CBU-9/A	23
DISPENSER AND BOMB, AIRCRAFT: CBU-9A/A	25
DISPENSER AND BOMB, AIRCRAFT: CBU-9B/A	27
DISPENSER AND BOMB, AIRCRAFT: CBU-12/A	29
DISPENSER AND BOMB, AIRCRAFT: CBU-12A/A	31
DISPENSER AND BOMB, AIRCRAFT: CBU-14/A	33
DISPENSER AND BOMB, AIRCRAFT: CBU-14A/A	35
DISPENSER AND BOMB, AIRCRAFT: CBU-15/A	37
DISPENSER AND BOMB, AIRCRAFT: CBU-17/A	39
DISPENSER AND BOMB, AIRCRAFT: CBU-22/A	41
DISPENSER AND BOMB, AIRCRAFT: CBU-22A/A	43
DISPENSER AND BOMB, AIRCRAFT: CBU-24A/B	45
DISPENSER AND BOMB, AIRCRAFT: CBU-24/B	47
DISPENSER AND BOMB, AIRCRAFT: CBU-24/B (Mod)	49
DISPENSER AND BOMB, AIRCRAFT: CBU-24B/B	51
DISPENSER AND BOMB, AIRCRAFT: CBU-24C/B	53
DISPENSER AND BOMB, AIRCRAFT: CBU-25/A	55
DISPENSER AND BOMB, AIRCRAFT: CBU-25A/A	57
DISPENSER AND BOMB, AIRCRAFT: CBU-25B/A	59
DISPENSER AND BOMB, AIRCRAFT: CBU-26/A	61
DISPENSER AND BOMB, AIRCRAFT: CBU-29A/B	63
DISPENSER AND BOMB, AIRCRAFT: CBU-29/B	65
DISPENSER AND BOMB, AIRCRAFT: CBU-29/B (Mod)	67
DISPENSER AND BOMB, AIRCRAFT: CBU-29B/B	69
DISPENSER AND BOMB, AIRCRAFT: CBU-29C/B	71
DISPENSER AND MINE, AIRCRAFT: CBU-33/A	73
DISPENSER AND MINE, AIRCRAFT: CBU-34/A	75
DISPENSER AND MINE, AIRCRAFT: CBU-34A/A	77
DISPENSER AND BOMB, AIRCRAFT: CBU-38/A	79
DISPENSER AND MINE, AIRCRAFT: CBU-42/A	81
DISPENSER AND BOMB, AIRCRAFT: CBU-46/A	83
DISPENSER AND BOMB, AIRCRAFT: CBU-49A/B	85
DISPENSER AND BOMB, AIRCRAFT: CBU-49/B (Mod)	87
DISPENSER AND BOMB, AIRCRAFT: CBU-49B/B	89
DISPENSER AND BOMB, AIRCRAFT: CBU-49C/B	91
DISPENSER AND BOMB, AIRCRAFT: CBU-52/B	93
DISPENSER AND BOMB, AIRCRAFT: CBU-63/B	95
DISPENSER AND MINE, AIRCRAFT: SUU-41B/A (CDU-4/B)	97
DISPENSER AND MINE, AIRCRAFT: SUU-41B/A (CDU-5/B)	99
DISPENSER AND MINE, AIRCRAFT: SUU-41B/A (CDU-10/B)	101
DISPENSER AND MINE, AIRCRAFT: SUU-41B/A (CDU-14/B)	103
ADAPTER, BOMB CLUSTER: ADU-253A/B	105
ADAPTER, BOMB CLUSTER: ADU-253/B	107

Page

ADAPTER, BOMB CLUSTER: ADU-253B/B ---------- 109
ADAPTER, BOMB CLUSTER: ADU-256A/B ---------- 111
ADAPTER, BOMB CLUSTER: ADU-256/B ---------- 113
ADAPTER, BOMB CLUSTER: ADU-256B/B ---------- 115
ADAPTER, BOMB CLUSTER: ADU-272A/B ---------- 117
ADAPTER, BOMB CLUSTER: ADU-272/B ---------- 119
ADAPTER, BOMB CLUSTER: ADU-272B/B ---------- 121
ADAPTER, BOMB CLUSTER: ADU-285A/B ---------- 123
ADAPTER, BOMB CLUSTER: ADU-285B/B ---------- 125
CLUSTER BOMB MK 15 MOD 0 ---------- 127
CLUSTER BOMB MK 18 MOD 0 ---------- 129
CLUSTER BOMB MK 19 MOD 0 ---------- 131
CLUSTER BOMB MK 21 MOD 0 ---------- 133
CLUSTER BOMB MK 22 MOD 0 ---------- 135
RELOAD KIT: CBU-42/A ---------- 137
WARHEAD SECTION, GUIDED MISSILE, HE, AGM-12/E (BLU-26/B; -36/B) ---------- 139
WARHEAD SECTION, GUIDED MISSILE, HE, AGM-12/E (BLU-26/B; -59/B) ---------- 141

CHARACTERISTICS

Bomb dispenser SUU-7/A:	
Length	118.8 in.
Diameter	15.6 in.
Distance between suspension lugs	14 in.
Weight (approx):	
Empty	140 lb
Loaded	750 lb
Center of gravity (measured from nose end):	
Empty	56.5 in.
Loaded	61.2 in.
Bomb BLU-4/B:	
Length	4.92 in.
Diameter (max)	2.76 in.
Weight	1.18 lb
Number of bombs in dispenser	508
Total explosive weight (approx) (508 bombs)	89.80 lb
Shipping and storage container M468:	
Length	136 in.
Width	31 in.
Height	29 in.
Weight:	
Empty	550 lb
With loaded dispenser	300 lb
Cube	70.75 cu ft
Center of gravity from front end:	
Empty	66.1 in.
Loaded	70.60 in.
Logistics:	
Quantity-distance class	7
Storage compatibility group (Army and Air Force)	A
DOT shipping class	A
DOT shipping designation	Explosive Bomb
Coast Guard classification	VII
Aircraft speed range	350 to 550 knots
Bomb pattern dimensions	1000 ft x 50 ft

REFERENCES: TM 9-1325-201-12/OP 2973
TM 9-1325-201-35/OP 3038

DISPENSER AND BOMB, AIRCRAFT: CBU-1A/A

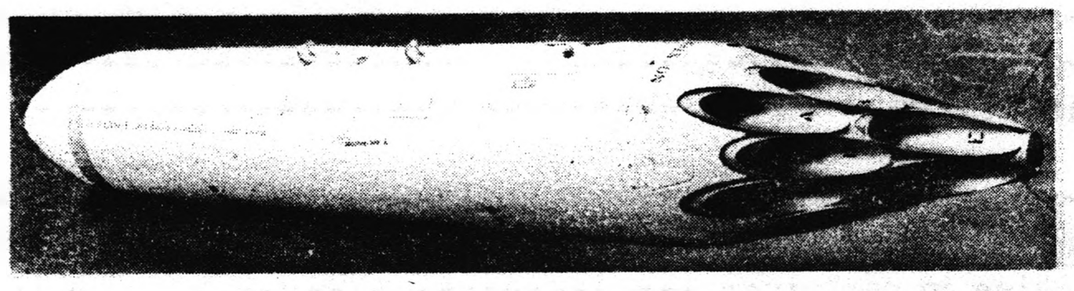

DISPENSER SUU-7A/A

BOMB BLU-4A/B

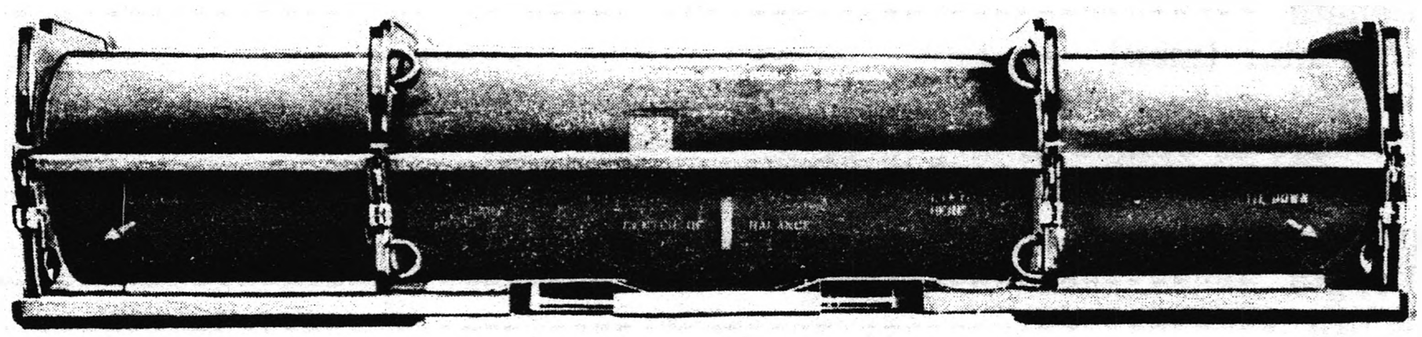

CONTAINER M468

MU-L1396

Federal Item Identification	FSN
DISPENSER AND BOMB, AIRCRAFT: CBU-1A/A	1325-446-5367
DISPENSER, BOMB: SUU-7A/A	1325-961-4238
BOMB, FRAGMENTATION: BLU-4A/B	1325-446-5368
SHIPPING AND STORAGE CONTAINER, BOMB DISPENSER: M468	8140-446-5366

GENERAL

The CBU-1A/A is designed to be mounted on Air Force aircraft F-4C, F-5, F-84, F-86, F-100, F-104G, F-105 and Navy aircraft A4 and F8U. It is an antipersonnel munition. The dispenser has a thin aluminum skin and contains 19 thin-walled, anodized aluminum tubes that are loaded with 509 bombs BLU-4A/B. The dispenser is designed to release one, two, or three tubeloads of bombs with each application of electric current. The choice is made before the dispenser is attached to the aircraft.

The fragmentation bomb BLU-4A/B is a small, antipersonnel bomb. When the bomb is ejected from the dispenser, air pressure lifts off the tab which releases the ring holding the drag vanes together. The drag vanes then spring outward, stabilizing and orienting the bomb in its fall and arming the ejection portion of the bomb. Upon impact, the fragmenting hemisphere is ejected from the bomb housing and a lanyard which is fastened to both the fragmenting hemisphere and the bomb housing unreels. When the lanyard reaches its full 10-foot length, it initiates the high-explosive charge in the fragmenting hemisphere.

The CBU munition is stored and transported in the cylindrical steel shipping and storage container M468. An inspection port cover is located in the rear end for monitoring the humidity indicator in the tail cone protector.

CHARACTERISTICS

Bomb dispenser SUU-7A/A:	
Length	118.42 in.
Diameter (max)	15.6 in.
Distance between suspension lugs	14 in.
Weight (approx):	
Empty dispenser	121 lb
Loaded, ready for aircraft attachment	752 lb
Loaded, ready for packing in container	773 lb
Center of gravity (measured from nose) (w/o nose cone plug and tail cone protector):	
Empty dispenser	55.2 in.
Loaded dispenser	60.96 in.
Bomb BLU-4A/B:	
Length	4.92 in.
Diameter (max)	2.78 in.
Weight	1.19 lb
Number of bombs in dispenser	509
Total explosive weight (approx) (509 bombs)	90.97 lb
Shipping and storage container M468:	
Length	136 in.
Width	31 in.
Height	29 in.
Weight:	
Empty	550 lb
With loaded dispenser	1,223 lb
Cube	70.75 cu ft
Center of gravity from front end	66.1 in.
Logistics:	
Quantity-distance class	7
Storage compatibility group (Army and Air Force)	A
DOT shipping class	A
DOT shipping designation	Explosive Bomb
Coast Guard classification	VII
Aircraft speed range	350-550 knots

REFERENCES: TM 9-1325-202-12/2/OP 3217/2/TO 11A1-5-8-1/B
TM 9-1325-202-35/1/OP 3217, Vol. 1/TO 11A1-5-8-22

DISPENSER AND BOMB, AIRCRAFT: CBU-2/A

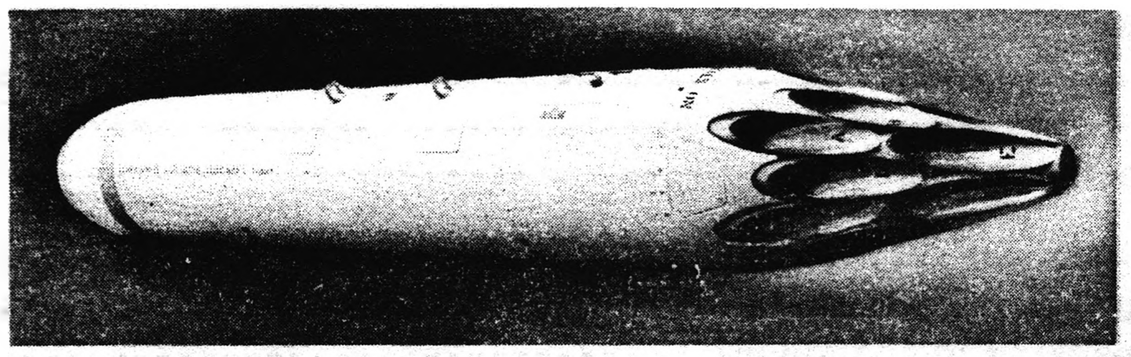

DISPENSER SUU-7A/A

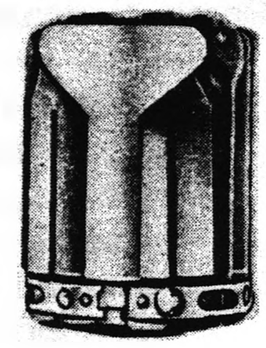

BOMB
BLU-3/B

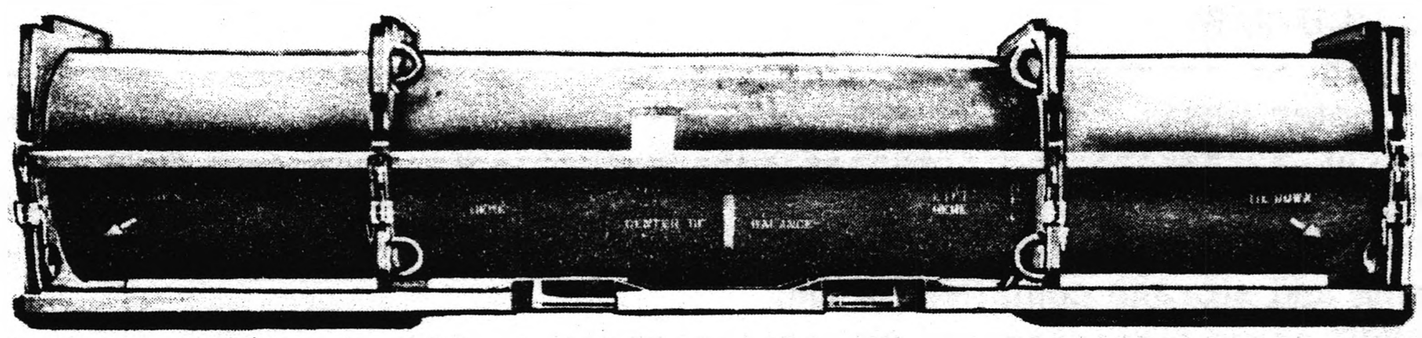

CONTAINER M468

MU-L1397-A

Federal Item Identification	FSN
DISPENSER AND BOMB, AIRCRAFT: CBU-2/A	1325-739-1741
DISPENSER, BOMB: SUU-7A/A	1325-961-4238
BOMB, FRAGMENTATION: BLU-3/B	1325-429-2972
SHIPPING AND STORAGE CONTAINER, BOMB DISPENSER: M468	8140-446-5366

GENERAL

The CBU-2/A is designed to be mounted on Air Force aircraft F-4C, F-5, F-84, F-86, F-100, F-104, and F-105 and Navy aircraft A-4D and F8U. It is an antimateriel munition and is used against targets such as trucks, parked aircraft, ammunition, fuel tanks, and radar equipment. The dispenser has a thin aluminum skin and contains 19 thin-walled, anodized aluminum tubes, 17 of which are loaded with 360 bombs BLU-3/B. The dispenser is designed to release one, two, three, four, six, or salvo (all at once) tubeloads of bombs with an application of electric current. The choice is made before the dispenser is attached to the aircraft.

The fragmentation bomb BLU-3/B is a small, antimateriel bomb that detonates upon impact with surfaces such as water, mud, soft earth, or any harder surfaces. Upon detonation, the bomb discharges steel balls at high velocity in a radial pattern. When the bomb is ejected from the dispenser, air-pressure lifts off the spring tab which releases the safety strap holding the vanes together. The vanes then spring outward, stabilizing and orienting the bomb in its fall and arming the high-explosive portion of the bomb. Impact with a target detonates the high-explosive filler which bursts the bomb case and drives the steel balls outward.

The CBU munition is stored and transported in the cylindrical steel shipping and storage container M468. An inspection port cover is located in the rear end for monitoring the humidity indicator in the tail cone protector.

CHARACTERISTICS

Bomb dispenser SUU-7A/A:	
Length	118.42 in.
Diameter (max)	15.6 in.
Distance between suspension lugs	14 in.
Weight (approx):	
Empty	121 lb
Loaded (ready for aircraft attachment)	749 lb
Loaded (ready for packing in container)	785 lb
Center of gravity (measured from nose) (w/o nose cone plug and tail cone protector):	
Empty	55.2 in.
Loaded	64.8 in.
Bomb BLU-3/B:	
Length	3.75 in.
Diameter (max)	2.75 in.
Weight	1.73 lb
Number of bombs in dispenser	360
Total explosive weight (approx) (360 bombs)	129.07 lb
Shipping and storage container M468:	
Length	136 in.
Width	31 in.
Height	29 in.
Weight:	
Empty	550 lb
With loaded dispenser	1,335 lb
Cube	70.75 cu ft
Center of gravity from front end	66.1 in.
Logistics:	
Quantity-distance class	7
Storage compatibility group (Army and Air Force)	G
DOT shipping class	A
DOT shipping designation	Explosive Bomb
Coast Guard classification	VII
Aircraft speed range	350 to 550 knots

REFERENCES: TM 9-1325-202-12/1/OP 3195, Vol. 1/TO 11A1-5-8-1
TM 9-1325-202-35/1/OP 3217, Vol. 1/TO 11A1-5-8-22

DISPENSER AND BOMB, AIRCRAFT: CBU-2A/A

DISPENSER SUU-7A/A

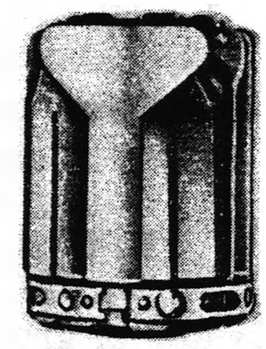

BOMB
BLU-3/B

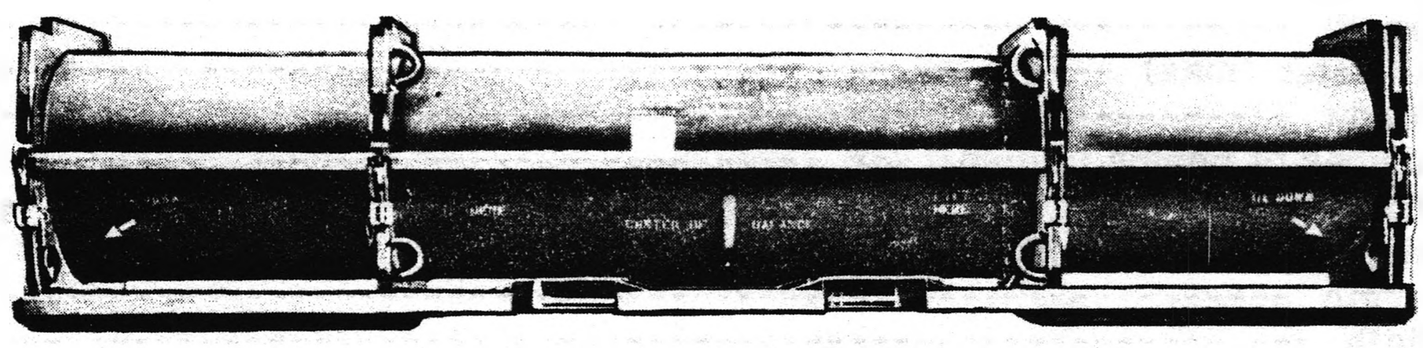

CONTAINER M468

MU-L1397-A

Federal Item Identification	FSN
DISPENSER AND BOMB, AIRCRAFT: CBU-2A/A	1325-992-7122
DISPENSER, BOMB: SUU-7A/A	1325-961-4238
BOMB, FRAGMENTATION: BLU-3/B	1325-429-2972
SHIPPING AND STORAGE CONTAINER, BOMB DISPENSER: M468	8140-446-5366

GENERAL

The CBU-2A/A is designed to be mounted on Air Force aircraft F-4C, F-5, F-84, F-86, F-100, F-104, F-105 and Navy aircraft A4D and F8U. It is an antimaterial munition and is used against targets such as trucks, parked aircraft, ammunition, fuel tanks, and radar equipment. The dispenser has a thin aluminum skin and contains 19 thin-walled, anodized aluminum tubes that are loaded with 406 bombs BLU-3/B. The dispenser is designed to release one, two, three, four, six, or salvo (all at once) tubeloads of bombs with an application of electric current. The choice is made before the dispenser is attached to the aircraft.

The fragmentation bomb BLU-3/B is a small, antimateriel bomb that detonates upon impact with surfaces such as water, mud, soft earth, or any harder surfaces. Upon detonation, the bomb discharges steel balls at high velocity in a radial pattern. When the bomb is ejected from the dispenser, air-pressure lifts off the spring tab which releases the safety strap holding the vanes together. The vanes then spring outward, stabilizing and orienting the bomb in its fall and arming the high-explosive portion of the bomb. Impact with a target detonates the high-explosive filler which bursts the bomb case and drives the steel balls outward.

The CBU munition is stored and transported in the cylindrical steel shipping and storage container M468. An inspection port cover is located in the rear end for monitoring the humidity indicator in the tail cone protector.

CHARACTERISTICS

Bomb dispenser SUU-7A/A:	
Length	118.42 in.
Diameter (max)	15.6 in.
Distance between suspension lugs	14 in.
Weight (approx):	
Empty	121 lb
Loaded, ready for aircraft attachment	828 lb
Loaded, ready for packing in container	855 lb
Center of gravity (measured from nose) (w/o nose cone plug and tail cone protector):	
Empty	55.2 in.
Loaded	62.2 in.
Bomb BLU-3/B:	
Length	3.75 in.
Diameter (max)	2.75 in.
Weight	1.73 lb
Number of bombs in dispenser	406
Total explosive weight (approx) (406 bombs)	143.06 lb
Shipping and storage container M468:	
Length	136 in.
Width	31 in.
Height	29 in.
Weight:	
Empty	550 lb
With loaded dispenser	1,405 lb
Cube	70.75 cu ft
Center of gravity from front end	66.1 in.
Logistics:	
Quantity-distance class	7
Storage compatibility group (Army and Air Force)	G
DOT shipping class	A
DOT shipping designation	Explosive Bomb
Coast Guard classification	VII
Aircraft speed range	350 to 550 knots

REFERENCES: TM 9-1325-202-12/1/OP 3195, Vol. 1/TO 11A1-5-8-1
TM 9-1325-202-35/1/OP 3217, Vol. 1/TO 11A1-5-8-22

DISPENSER AND BOMB, AIRCRAFT: CBU-2B/A

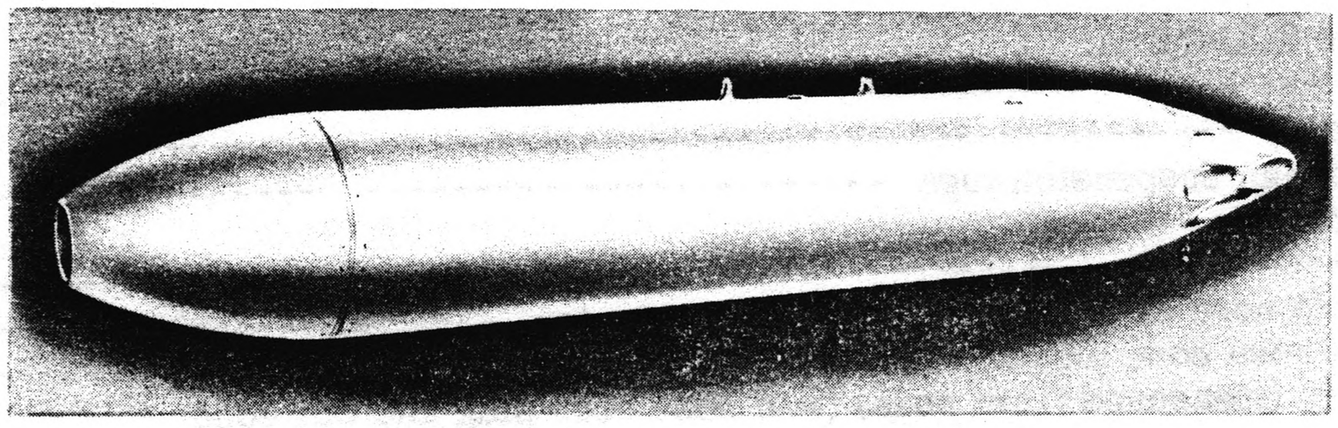

DISPENSER SUU-7B/A

BOMB
BLU-3/B

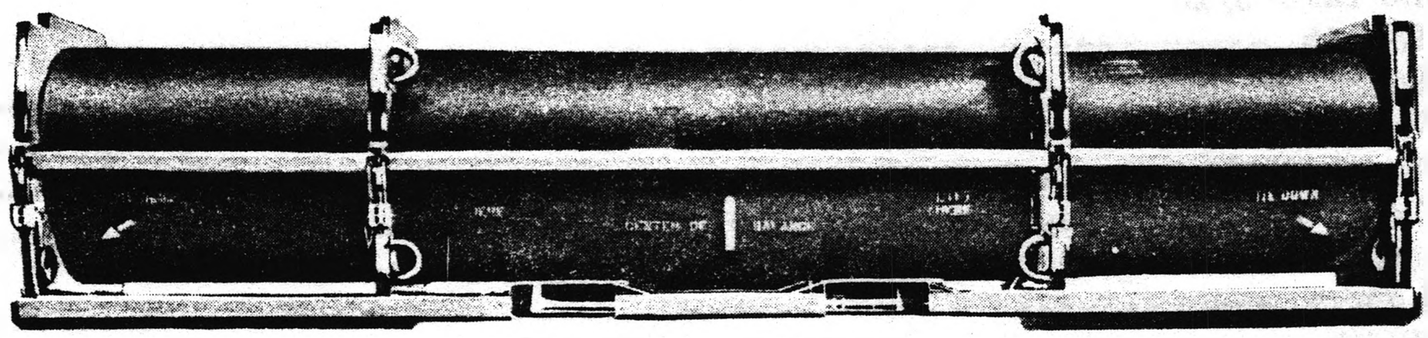

CONTAINER M468

MU-L1399-A

Federal Item Identification	FSN
DISPENSER AND BOMB, AIRCRAFT: CBU-2B/A	1325-051-2880
DISPENSER, BOMB: SUU-7B/A	1325-872-3163
BOMB, FRAGMENTATION: BLU-3/B	1325-429-2972
SHIPPING AND STORAGE CONTAINER, BOMB DISPENSER: M468	8140-446-5366

GENERAL

The CBU-2B/A is designed to be mounted on Air Force aircraft F-4C, F-5, F-84, F-85, F-100, F-104, F-105 and Navy aircraft A4D and F8U. It is an antimateriel munition and is used against targets such as tanks, armored cars, armored personnel carriers, and parked aircraft. The dispenser contains 19 aluminum tubes that are loaded with 409 bombs BLU-3/B. The dispenser is designed to release two, four, or six tubeloads of bombs with each application of the pilot's firing button. The choice is made by rotating a manual selector switch on the top of the dispenser to the desired position prior to flight of the aircraft.

The fragmentation bomb BLU-3/B is a small, antimateriel bomb that detonates upon impact with surfaces such as water, mud, soft earth, or any harder surfaces. Upon detonation, the bomb discharges steel balls at high velocity in a radial pattern. When the bomb is ejected from the dispenser, air-pressure lifts off the spring tab which releases the safety strap holding the vanes together. The vanes then spring outward, stabilizing and orienting the bomb in its fall and arming the high-explosive portion of the bomb. Impact with a target detonates the high-explosive filler which bursts the bomb case and drives the steel balls outward.

The CBU munition is stored and transported in the cylindrical steel shipping and storage container M468. An inspection port cover is located in the rear end for monitoring the humidity indicator in the tail cone protector.

CHARACTERISTICS

Bomb dispenser SUU-7B/A:	
Length	118.42 in.
Diameter (max)	15.6 in.
Distance between suspension lugs	14 in.
Weight (approx):	
Empty	128 lb
Loaded w/o nose cone plug and tail cone protector	840 lb
Loaded w/nose cone plug and tail cone protector	870 lb
Center of gravity (measured from nose) (w/o nose cone plug and tail cone protector):	
Empty	54.22 in.
Loaded	62.5 in.
Bomb BLU-3/B:	
Length	3.75 in.
Diameter (max)	2.75 in.
Weight	1.73 lb
Number of bombs in dispenser	409
Total explosive weight (approx) (409 bombs)	144.14 lb
Shipping and storage container M468:	
Length	136 in.
Width	31 in.
Height	29 in.
Weight:	
Empty	550 lb
With loaded dispenser	1,420 lb
Cube	70.75 cu ft
Center of gravity from front end	66.1 in.
Logistics:	
Quantity-distance class	7
Storage compatibility group (Army and Air Force)	G
DOT shipping class	A
DOT shipping designation	Explosive Bomb
Coast Guard classification	VII
Aircraft speed range	350-550 knots

REFERENCES: TM 9-1325-202-12/1/OP 3195, Vol. 1/TO 11A1-5-8-1
TM 9-1325-202-35/1/OP 3217, Vol. 1/TO 11A1-5-8-22

DISPENSER AND BOMB, AIRCRAFT: CBU-2C/A

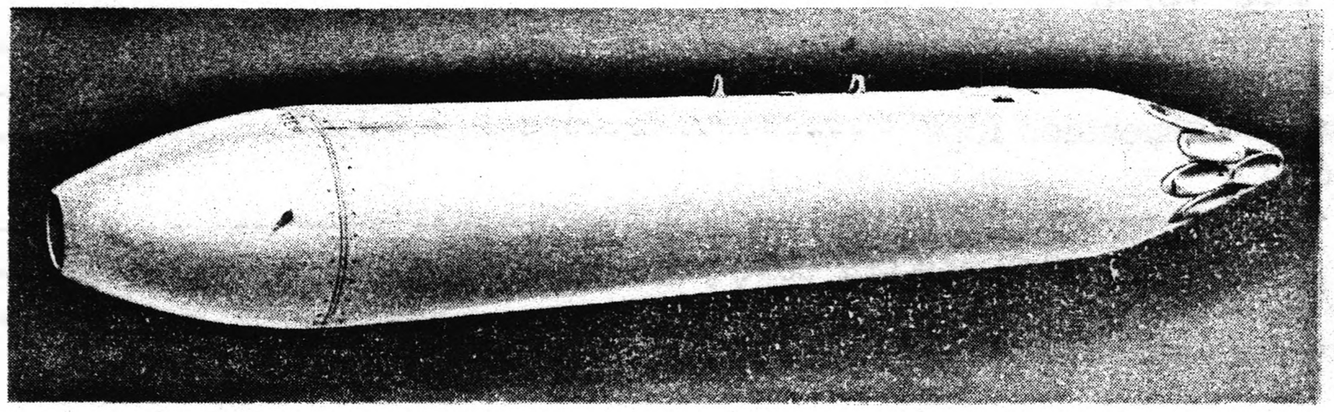

DISPENSER SUU-7C/A

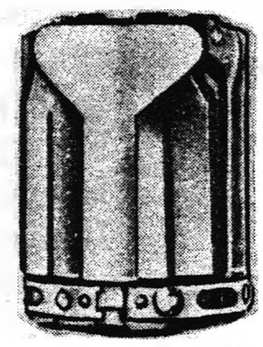

BOMB
BLU-3/B

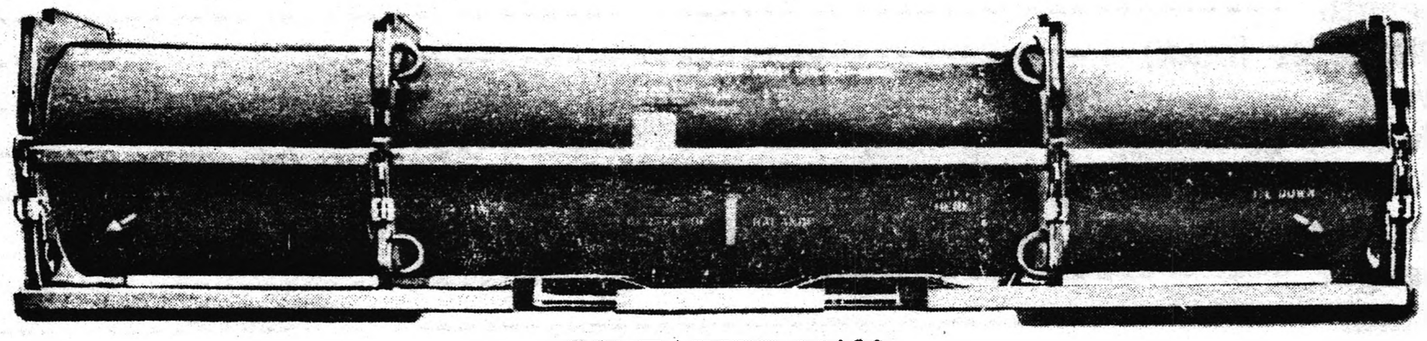

CONTAINER M468

MU-L1892

Federal Item Identification	FSN
DISPENSER AND BOMB, AIRCRAFT: CBU-2C/A	1325-937-5671
DISPENSER, BOMB: SUU-7C/A	1325-927-1162
BOMB, FRAGMENTATION: BLU-3/B	1325-429-2972
SHIPPING AND STORAGE CONTAINER, BOMB DISPENSER: M468	8140-446-5366

GENERAL

The CBU-2C/A is designed to be mounted on Air Force aircraft F-4C, F-5, F-84, F-85, F-100, F-104, F-105, and Navy Aircraft A4D and F8U. The dispenser contains 19 aluminum tubes that are loaded with 409 bombs BLU-3/B. Bomb BLU-3/B is an antimateriel munition and is used against targets such as trucks, ammunition, fuel tanks, radar equipment, and parked aircraft. The dispenser is designed to release two, four, or six tubeloaded of bombs with each application of the pilot's firing button. In addition, there is also a salvo firing setting on the dispenser. The choice is made by rotating a manual selector switch on the top of the dispenser to the desired position prior to flight of the aircraft.

The fragmentation bomb BLU-3/B is a small, antimateriel bomb that detonates upon impact with surfaces such as water, mud, soft earth, or any harder surfaces. Upon detonation, the bomb discharges steel balls at high-velocity in a radial pattern. When the bomb is ejected from the dispenser, air-pressure lifts off the spring tab which releases the safety strap holding the vanes together. The vanes then spring outward, stabilizing and orienting the bomb in its fall and arming the high-explosive portion of the bomb. Impact with a target detonates the high-explosive filler which bursts the bomb case and drives the steel balls outward.

The CBU munition is stored and transported in the cylindrical steel shipping and storage container M468. An inspection port cover is located in the rear end for monitoring the humidity indicator in the tail cone protector.

CHARACTERISTICS

Bomb dispenser SUU-7C/A:	
Length	118.42 in.
Diameter (max)	15.6 in.
Distance between suspension lugs	14 in.
Weight (approx):	
Empty	165 lb
Loaded w/o nose cone plug and tail cone protector	877 lb
Loaded w/nose cone plug and tail cone protector	890 lb
Center of gravity (measured from nose) (w/o nose cone plug and tail cone protector):	
Empty	61.34 in.
Loaded	63.55 in.
Fragmentation bomb BLU-3/B:	
Length	3.75 in.
Diameter (max)	2.75 in.
Weight	1.73 lb
Number of bombs in dispenser	409
Total explosive weight (approx) (409 bombs)	144.14 lb
Bomb dispenser shipping and storage container M468:	
Length	136 in.
Width	31 in.
Height	29 in.
Weight:	
Empty	550 lb
With loaded dispenser	1,420 lb
Cube	70.75 cu ft
Center of gravity from front end	66.1 in.
Logistics:	
Quantity-distance class:	
Air Force	5(M)
Army	7
Storage compatibility group	G
DOT shipping class	A
DOT shipping designation	Explosive Bomb
Coast Guard classification	VII
Aircraft speed range	350-550 knots

REFERENCES: TM 9-1325-202-50/1/TO 11A1-5-1-7

DISPENSER AND BOMB, AIRCRAFT: CBU-3/A

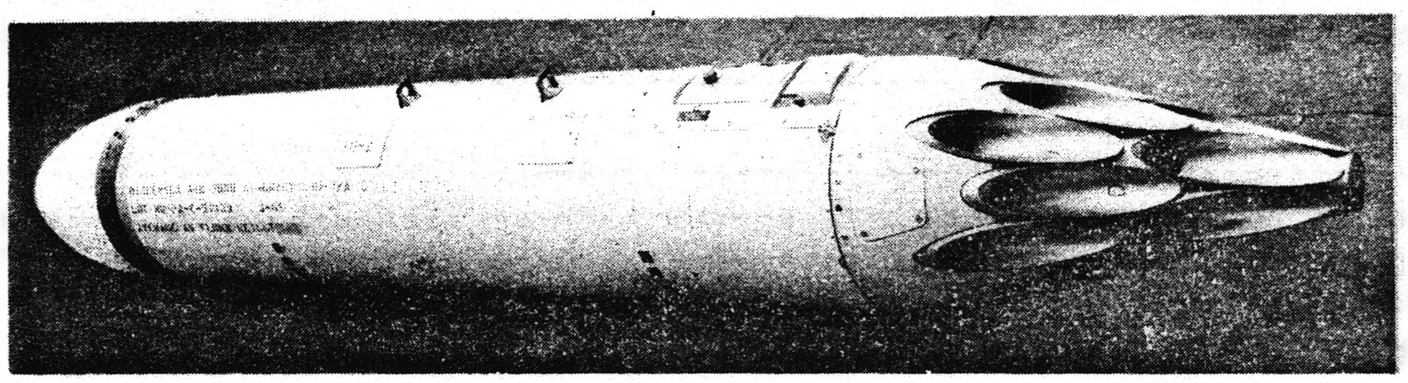

DISPENSER SUU-10/A

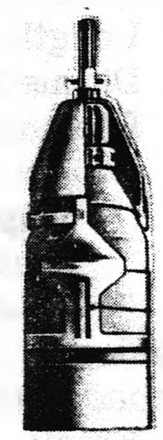

BOMB
BLU-7/B

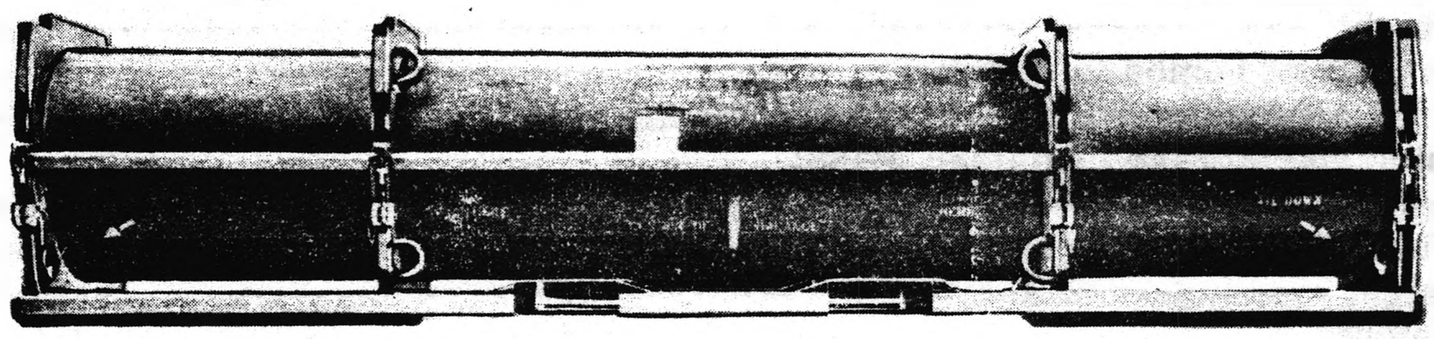

CONTAINER M468

MU-L1400

Federal Item Identification	FSN
DISPENSER AND BOMB, AIRCRAFT: CBU-3/A	1325-994-3061
DISPENSER, BOMB: SUU-10/A	1325-871-8521
BOMB, ANTITANK: BLU-7/B	1325-992-7123
SHIPPING AND STORAGE CONTAINER, BOMB DISPENSER: M468	8140-446-5366

GENERAL

The CBU-3/A is designed to be mounted on Air Force aircraft F-100 and F-105 and Navy aircraft F4. It is an antimateriel munition and is used against materiel such as tanks, armored cars, armored personnel carriers, and parked aircraft. The dispenser contains 19 thin-walled, anodized aluminum tubes that are loaded with 371 bombs BLU-7/B. The dispenser is designed to release simultaneously all 19 tubes of bombs with a single application of the pilot's firing button.

The bomb BLU-7/B is a small, parachute-armed-and-stabilized bomb having a shaped charge and integral fuze assembly. When the bomb is ejected from the dispenser, the air stream tears off the retaining clip which permits the retaining strap and parachute protector to fall off. This permits the ribbon parachute, folded within the parachute protector, to open up and function. Upon impact with a solid object such as a tank, inertia of the cap and firing pin, connected together by the spring pin, causes them to move downwards. The firing pin stabs the detonator which initiates the explosive train consisting of the lead cup, booster, and main charge.

The CBU munition is stored and transported in the cylindrical steel shipping and storage container M468. An inspection port cover is located in the rear end for monitoring the humidity indicator in the tail cone protector.

CHARACTERISTICS

Bomb dispenser SUU-10/A:	
Length	118.42 in.
Diameter (max)	15.6 in.
Distance between suspension lugs	14 in.
Weight (approx):	
Empty	138 lb
Loaded, ready for aircraft attachment	679 lb
Loaded, ready for packing in container	717 lb
Center of gravity (measured from nose) (w/o nose cone plug and tail cone protector):	
Empty	55.2 in.
Loaded	60.6 in.
Bomb BLU-7/B:	
Length	7.86 in.
Diameter (max)	2.75 in.
Weight	1.40 lb
Number of bombs in dispenser	371
Total explosive weight (approx) (371 bombs)	222.6 lb
Shipping and storage container M468:	
Length	136 in.
Width	31 in.
Height	29 in.
Weight:	
Empty	550 lb
With loaded dispenser	1,267 lb
Cube	70.75 cu ft
Center of gravity from front end	66.1 in.
Logistics:	
Quantity-distance class	7
Storage compatibility group (Army and Air Force)	G
DOT shipping class	A
DOT shipping designation	Explosive Bomb
Coast Guard classification	VII
Aircraft speed range	350-550 knots

REFERENCES: TM 9-1325-202-12/1/OP 3195, Vol. 1/TO 11A1-5-8-1
TM 9-1325-202-12/2/OP 3195, Vol. 2/TO 11A1-5-8-1/B
TM 9-1325-202-35/1/OP 3217, Vol. 1/TO 11A1-5-8-22
TM 9-1325-202-35/2/OP 3217, Vol. 2/TO 11A1-5-8-22/B

DISPENSER AND BOMB, AIRCRAFT: CBU-3A/A

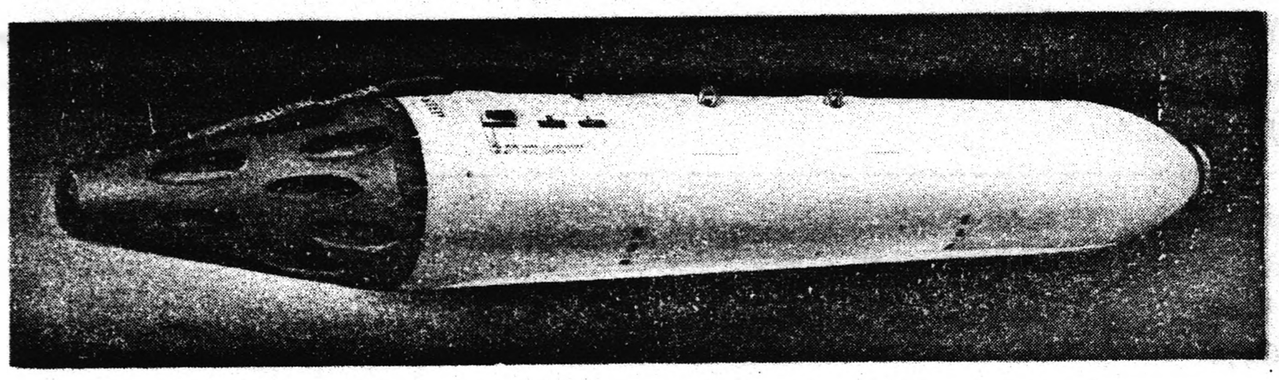

DISPENSER SUU-10A/A

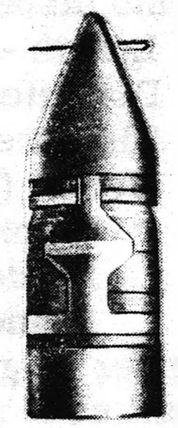

BOMB
BLU-7A/B

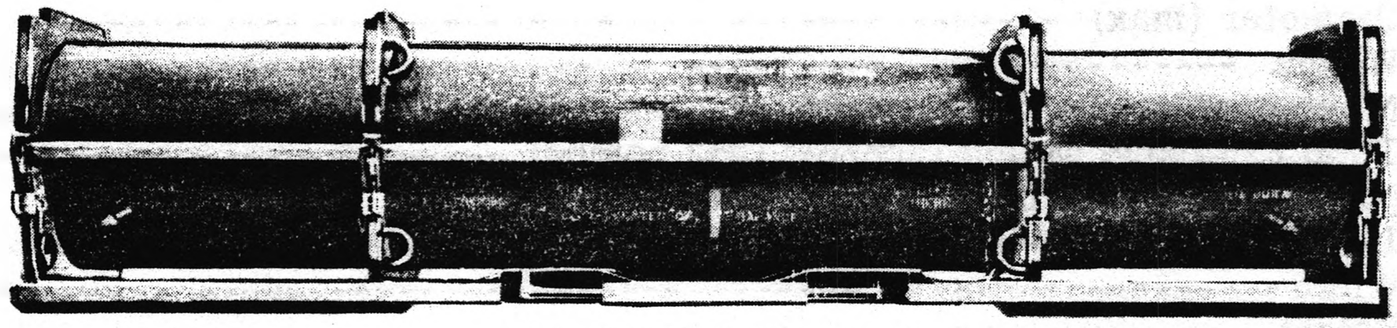

CONTAINER M468

MU-L1401

Federal Item Identification	FSN
DISPENSER AND BOMB, AIRCRAFT: CBU-3A/A	1325-868-2631
DISPENSER, BOMB: SUU-10A/A	1325-871-8522
BOMB, ANTITANK: BLU-7A/B	None
SHIPPING AND STORAGE CONTAINER, BOMB DISPENSER: M468	8140-446-5366

GENERAL

The CBU-3A/A is designed to be mounted on Air Force aircraft F-100 and F-105 and Navy aircraft F4. It is an antimateriel munition and is used against materiel such as tanks, armored cars, armored personnel carriers, and parked aircraft. The dispenser contains 19 thin-walled, anodized aluminum tubes that are loaded with 352 antitank bombs BLU-7A/B. The dispenser is designed to release simultaneously all 19 tubeloads of bombs with a single application of the pilot's firing button.

The antitank bomb BLU-7A/B is a small, parachute-armed-and-stabilized bomb having a shaped charge and integral fuze assembly. Upon impact with a solid object such as a tank, inertia of the firing pin causes it to overcome the creep spring and stab the detonator which initiates the explosive train. When the bomb is ejected from the dispenser, the airstream tears off the retaining clip which permits the retaining strap and both halves of the protector to fall away. This allows the parachute assembly, folded within the protector halves, to open up and function.

The CBU munition is stored and transported in the cylindrical steel shipping and storage container M468. An inspection port cover is located in the rear end for monitoring the humidity indicator in the tail cone protector.

CHARACTERISTICS

Bomb dispenser SUU-10A/A:	
Length	118.42 in.
Diameter (max)	15.6 in.
Distance between suspension lugs	14 in.
Weight (approx):	
Empty	138 lb
Loaded, ready for aircraft attachment	653 lb
Loaded, ready for packing in container	691 lb
Center of gravity (measured from nose) (w/o nose cone plug and tail cone protector):	
Empty	55.1 in.
Loaded	60.4 in.
Bomb BLU-7A/B:	
Length	8.28 in.
Diameter (max)	2.75 in.
Weight	1.40 lb
Number of bombs in dispenser	352
Total explosive weight (approx) (352 bombs)	211.2 lb
Shipping and storage container bomb dispenser M468:	
Length	136 in.
Width	31 in.
Height	29 in.
Weight:	
Empty	550 lb
With loaded dispenser	1,251 lb
Cube	70.75 cu ft
Center of gravity from front end	66.1 in.
Logistics:	
Quantity-distance class	7
Storage compatibility group (Army and Air Force)	G
DOT shipping class	A
DOT shipping designation	Explosive Bomb
Coast Guard classification	VII
Aircraft speed range	350-550 knots

REFERENCES: TM 9-1325-202-12/1/OP 3195, Vol. 1/TO 11A1-5-8-1
TM 9-1325-202-12/2/OP 3195, Vol. 2/TO 11A1-5-8-1/B
TM 9-1325-202-35/1/OP 3217, Vol. 1/TO 11A1-5-8-22
TM 9-1325-202-35/2/OP 3217, Vol. 2/TO 11A1-5-8-22/B

DISPENSER AND BOMB, AIRCRAFT: CBU-7/A

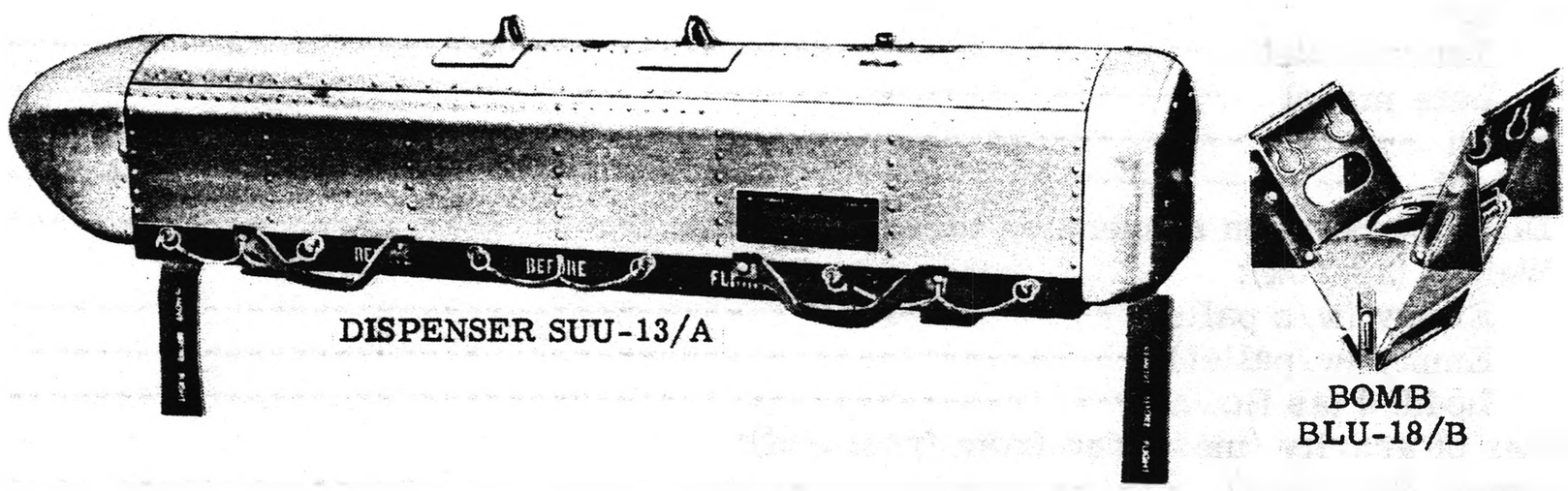

CONTAINER CNU-79/E

MU-L2226

Federal Item Identification	FSN
DISPENSER AND BOMB, AIRCRAFT: CBU-7/A	1325-867-1129
DISPENSER, BOMB: SUU-13/A	1325-788-5305
BOMB, FRAGMENTATION: BLU-18/B	1325-916-2228
SHIPPING AND STORAGE CONTAINER, BOMB DISPENSER: CNU-79/E	8140-867-1130

GENERAL

The CBU-7/A is designed to be mounted on Air Force aircraft F4C, D, and E, F-84, F-86, F-100, F-104, F-105, and F-111A. It is an antipersonnel munition. The dispenser contains 40 vertical, aluminum tube assemblies that are loaded with 1,200 bombs BLU-18/B. The dispenser is designed to release all 40 tubeloads of bombs with a single application of current through an intervalometer. Total release of all bombs is accomplished within a variable time span which is pre-set on the intervalometer before flight.

The bomb BLU-18/B is a small, vane-armed and oriented antipersonnel bomb consisting of two major groups of components, the housing assembly and the grenade assembly. When the bomb stack is ejected from the tube, the explosive rod assembly functions, and the individual bombs are dispersed. The bomb vanes open, and instant arming occurs. When the bomb impacts the target surface, the yoke drives the firing pin into the primer, which fires the propellant. The explosive delay train ignites the high-explosive RDX causing the bomb sphere to fragment 4-6 feet above the ground.

The CBU munition is stored and transported in the steel shipping and storage container CNU-79/E. The cover assembly is secured to the base assembly by 26 quick-acting T-bolts. The cover assembly has four eyes, two at each end for tiedown and towing (on early model container only). The base assembly has four lifting bars mounted on exterior gussets for lifting the loaded container with a sling.

CHARACTERISTICS

Bomb dispenser SUU-13/A:	
Length:	
Early model	102 in.
Late model	90.375 in.
Width	14.75 in.
Height	14.438 in.
Distance between suspension lugs	14 in.
Weight (approx):	
Empty (w/o pallet)	117 lb
Empty (w/pallet)	165 lb
Loaded (as flown)	822 lb
Center of gravity (measured from front end):	
Empty (as flown)	53.79 in.
Loaded (as flown)	51.6 in.
Bomb BLU-18/B (triangle 2" base, 2" wide, 1-1/2" depth):	
Weight	0.48 lb
Number of bombs in dispenser	1,200
Total explosive weight (approx) (1200 bombs)	58 lb
Bomb tube assembly:	
Weight (loaded)	18 lb
Number of bombs	30
Ejection cartridge:	
Propellant	1.75 grams (M5)
Primer	1.60 grains
Explosive delay train	0.320 gram
Shipping and storage container CNU-79/E:	
Length:	
Early model	116 in.
Late model	104 in.
Width	31.5 in.
Height	31.5 in.
Weight (approx):	
Empty:	
Early model	800 lb
Late model	675 lb
With loaded dispenser:	
Early model	1676 lb
Late model	1551 lb
Cube:	
Early model	64.6 cu ft
Late model	59.7 cu ft
Center of gravity from front end:	
Early model	58 in.
Late model	56.4 in.
Logistics:	
Quantity-distance class:	
Army	7
Air Force	5 (M)
Storage compatibility group (Army and Air Force)	G
DOT shipping class	A
DOT shipping designation	Explosive Bomb(s)
Coast Guard classification	VII

DISPENSER AND BOMB, AIRCRAFT: CBU-8/A

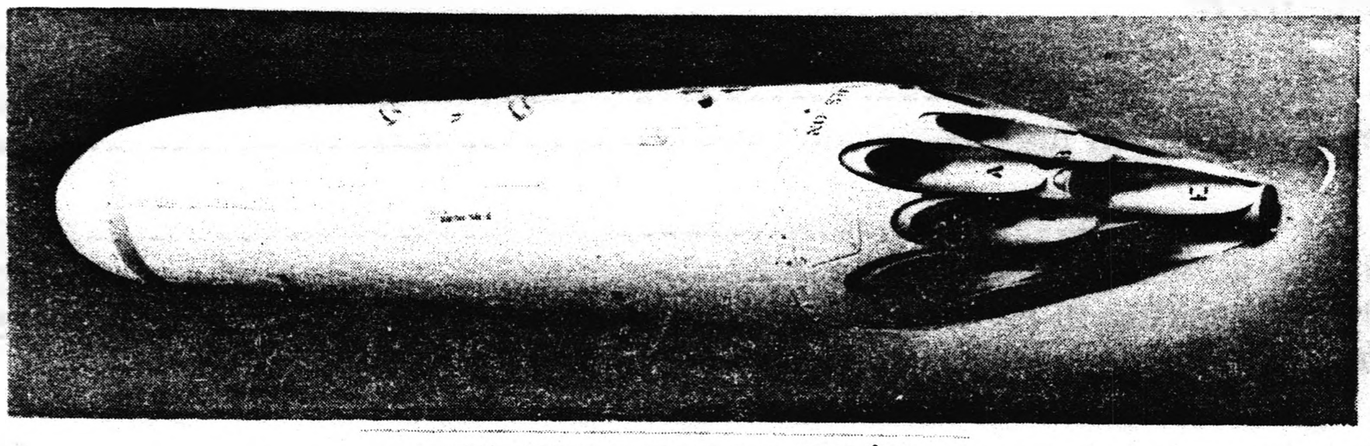

DISPENSER SUU-7A/A

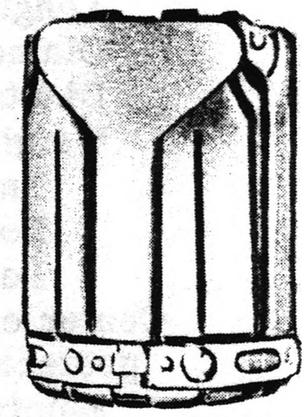

BOMB
BDU-27/B

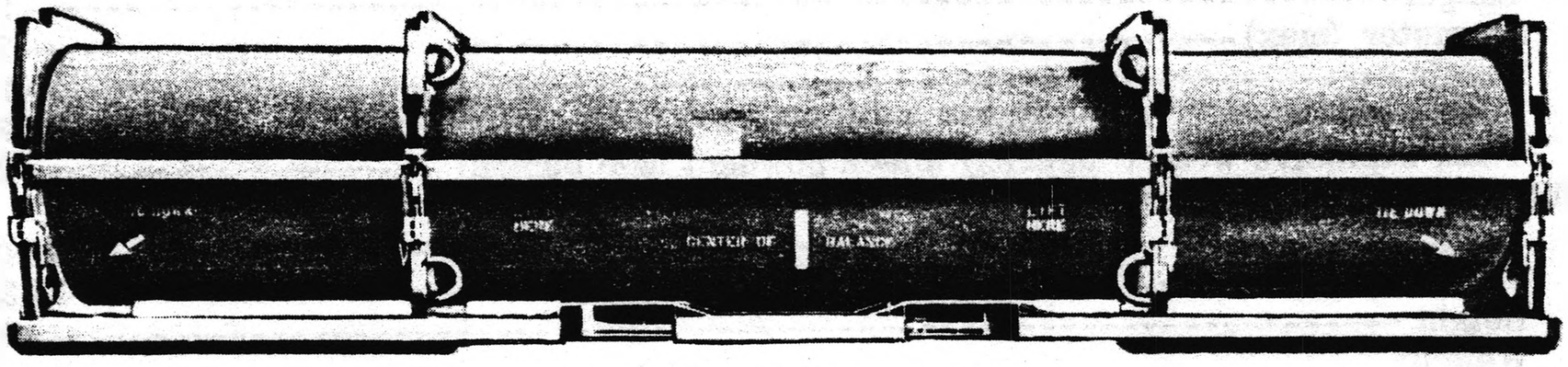

CONTAINER XM468

MU-L1403

Federal Item Identification	FSN
DISPENSER AND BOMB, AIRCRAFT: CBU-8/A	1325-961-4237
DISPENSER, BOMB: SUU-7A/A	1325-961-4238
BOMB, PRACTICE: BDU-27/B	1325-961-4235
SHIPPING AND STORAGE CONTAINER, BOMB DISPENSER: M468	8140-446-5366

GENERAL

The CBU-8/A consists of a dispenser SUU-7A/A loaded with 406 practice bombs -DU-27/B. It is designed to be mounted on Air Force aircraft F-4C, F-5, F-84, F-86, F-100, F-104, and F-105 and Navy aircraft A4 and F8U. The dispenser is designed to release one, two, three, four, six, or salvo (all at once) tubeloads of bombs with an application of electric current. The choice is made before the dispenser is attached to the aircraft.

The practice bomb BDU-27/B is a spotter version of the fragmentation bomb BLU-3/B. The external appearance is basically the same as the bomb BLU-3/B with the revised tab, except that the body is painted torch red with a 3/4" brown band. The body loading assembly of the BDU-27/B consists of a solid aluminum-alloy body which has two vertical holes drilled to receive two lead slugs for weight purposes, and one horizontal hole loaded with a black powder charge (38 ± 2 grains). When the bomb is ejected from the dispenser, air-pressure lifts off the spring tab which releases the safety strap holding the vanes together. The vanes then spring outward, arming the bomb and stabilizing it in its fall. Upon striking the ground, the firing pin strikes the detonator in the slide assembly.

The CBU munition is stored and transported in the cylindrical steel shipping and storage container M468. An inspection port cover is located in the rear end for monitoring the humidity indicator in the tail cone protector.

CHARACTERISTICS

Bomb dispenser SUU-7A/A:	
Length	118.42 in.
Diameter (max)	15.6 in.
Diastance between suspension lugs	14 in.
Weight (approx):	
Empty	121 lb
Loaded (ready for aircraft attachment)	825 lb
Loaded (ready for packing in container)	855 lb
Center of gravity (measured from nose) (w/o nose cone plug and tail cone protector):	
Empty	55.2 in.
Loaded	62.2 in.
Bomb BDU-27/B:	
Length	3.75 in.
Diameter (max)	2.76 in.
Weight	1.7 lb
Number of bombs in dispenser	406
Total explosive weight (approx) (black powder) (406 bombs)	2.2 lb
Shipping and storage container M468:	
Length	136 in.
Width	31 in.
Height	29 in.
Weight:	
Empty	550 lb
With loaded dispenser	1,415 lb
Cube	70.75 in.
Center of gravity from front end	66.1 in.
Logistics:	
Quantity-distance class	3
Storage compatibility group	E
DOT shipping class	B
DOT shipping designation	Special fireworks, handle carefully, keep fire away.
Coast Guard classification	III
Aircraft speed range	350 to 550 knots
Bomb pattern dimensions	1200 ft by 50 ft (rectangular)

REFERENCES: TM 9-1325-202-12/1/OP 3195, Vol. 1/TO 11A1-5-8-1
TM 9-1325-202-35/1/OP 3217, Vol. 1/TO 11A1-5-8-22

DISPENSER AND BOMB, AIRCRAFT: CBU-8A/A

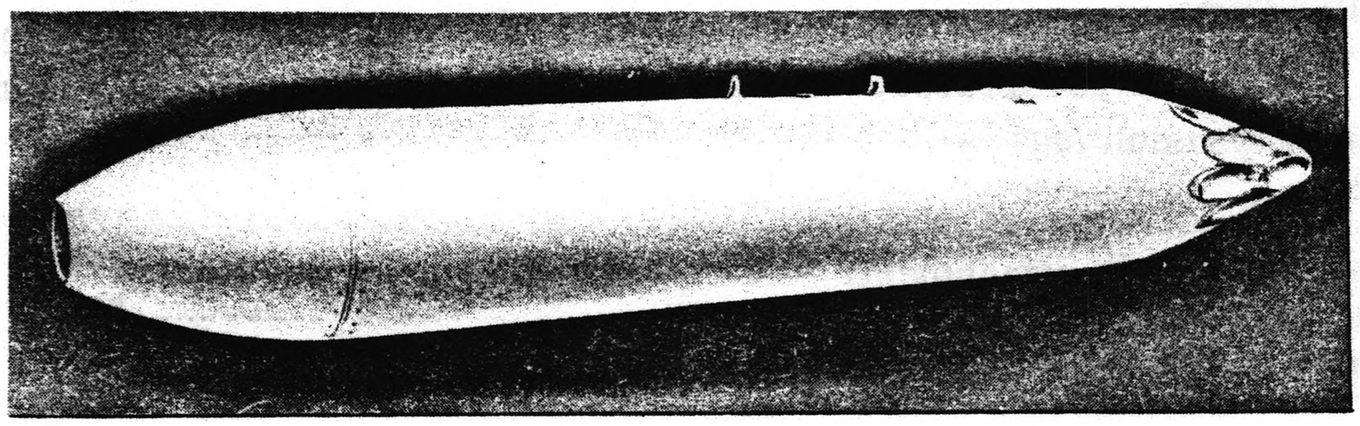

DISPENSER SUU-7C/A

BOMB
BDU-40/B

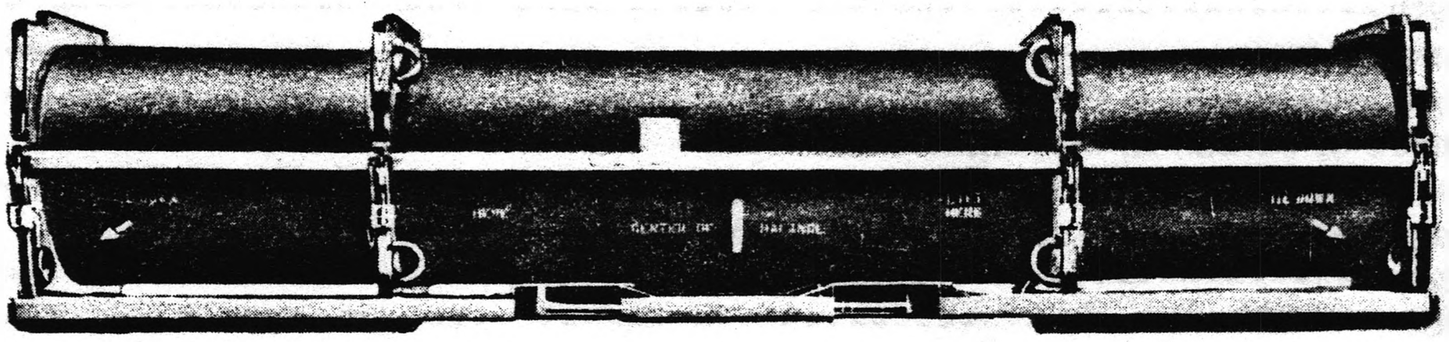

CONTAINER M468

MU-L1893

Federal Item Identification	FSN
DISPENSER AND BOMB, AIRCRAFT: CBU-8A/A	1325-937-5673
DISPENSER, BOMB: SUU-7C/A	1325-927-1162
BOMB, PRACTICE: BDU-40/B	1325-937-5677
SHIPPING AND STORAGE CONTAINER, BOMB DISPENSER: M468	8140-446-5366

GENERAL

The CBU-8A/A consists of a dispenser SUU-7C/A loaded with 409 practice bombs BDU-40/B. It is designed to be mounted on Air Force aircraft F-4C, F-5, F-84, F-86, F-100, F-104, F-105, and Navy aircraft A4 and F8U. The dispenser is designed to release two, four, six or salvo tubeloads of bombs with an application of electric current. The choice is made before the dispenser is attached to the aircraft.

The practice bomb BDU-40/B is a spotter version of the fragmentation bomb BLU-3/B. The external appearance is basically the same as the bomb BLU-3/B with the revised tab, except that the body is painted torch red with a 3/4 inch brown band. The body loading assembly of the BDU-40/B consists of a plastic body which has two vertical holes drilled to receive two lead slugs for weight purposes, and one vertical hole loaded with a shotgun shell. When the bomb is ejected from the dispenser, air-pressure lifts off the spring tab which releases the safety strap holding the vanes together. The vanes then spring outward, arming the bomb and stabilizing it in its fall. Upon striking the ground, the firing pin strikes the detonator in the slide assembly.

The CBU munition is stored and transported in the cylindrical steel shipping and storage container M468. An inspection port cover is located in the rear end for monitoring the humidity indicator in the tail cone protector.

CHARACTERISTICS

Bomb dispenser SUU-7C/A:	
Length	118.42 in.
Diameter (max)	15.6 in.
Distance between suspension lugs	14 in.
Weight (approx):	
Empty	165 lb
Loaded (ready for aircraft attachment)	877 lb
Loaded (ready for packing in container)	890 lb
Center of gravity (measured from nose) (w/o nose cone plug and tail cone protector):	
Empty	61.34 in.
Loaded	63.55 in.
Practice bomb BDU-40/B:	
Length	3.75 in.
Diameter (max)	2.75 in.
Weight	1.73 lb
Number of bombs in dispenser	409
Total explosive weight (approx) (409 bombs)	2.05 lb
Bomb dispenser shipping and storage container M468:	
Length	136 in.
Width	31 in.
Height	29 in.
Weight:	
Empty	550 lb
With loaded dispenser	1,415 lb
Cube	70.75 in.
Center of gravity from front end	66.1 in.
Logistics:	
Quantity-distance class	1
Storage compatibility group	B, E, or N
DOT shipping class	B
DOT shipping designation	Special fireworks, handle carefully, keep fire away.
Aircraft speed range	350-550 knots

REFERENCES: TM 9-1325-202-50/1/TO 11A1-5-1-7.

DISPENSER AND BOMB, AIRCRAFT: CBU-9/A

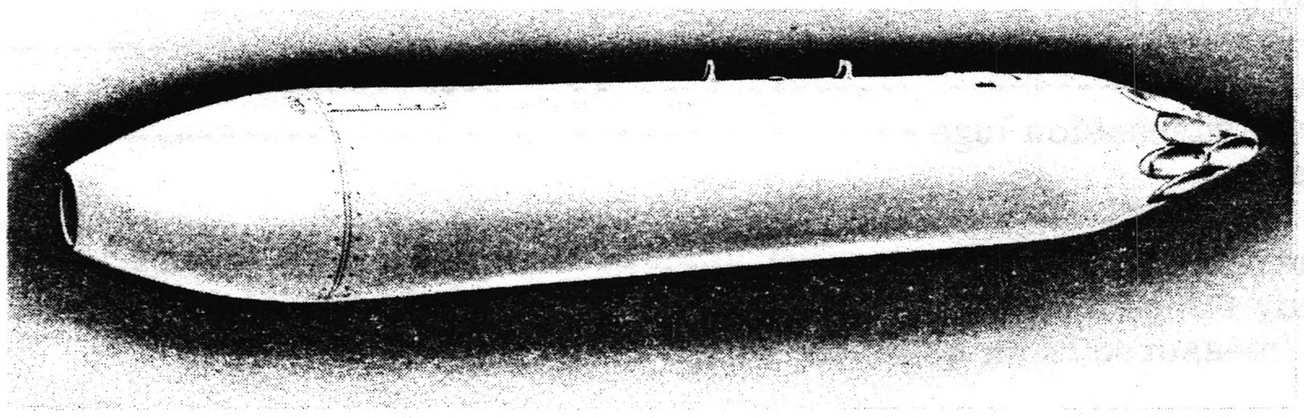

DISPENSER SUU-7A/A

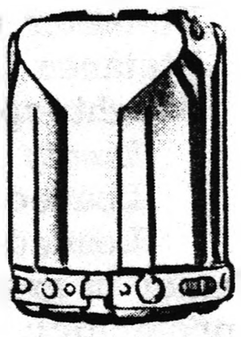

BOMB
BDU-28/B

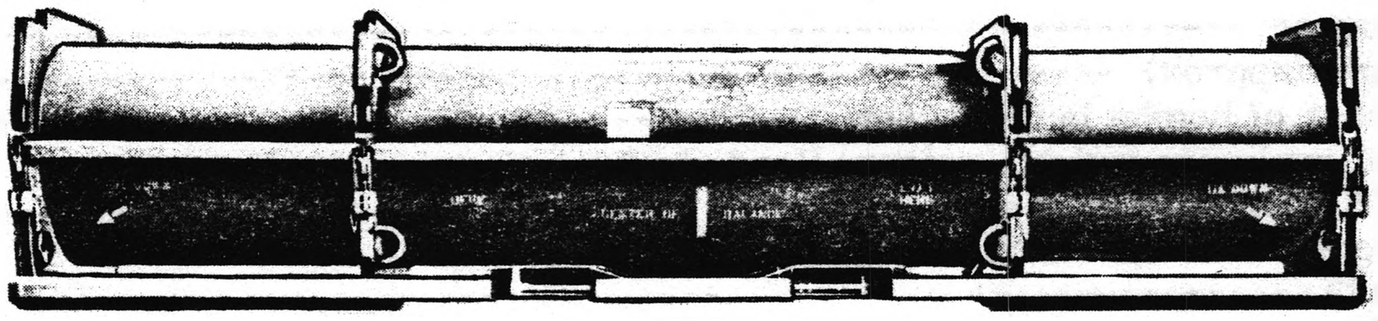

CONTAINER M468

MU-L1405

Federal Item Identification	FSN
DISPENSER AND BOMB, AIRCRAFT: CBU-9/A	1325-961-4236
DISPENSER, BOMB: SUU-7A/A	1325-961-4238
DUMMY BOMB: BDU-28/B	1325-961-4234
SHIPPING AND STORAGE CONTAINER, BOMB DISPENSER: M468	8140-446-5366

GENERAL

The CBU-9/A consists of a dispenser SUU-7A/A loaded with 406 dummy bombs BDU-28/B. It is designed to be mounted on Air Force aircraft F-4C, F-5, F-84, F-86, F-100, F-104, and F-105 and Navy aircraft A4 and F8U. The dispenser is designed to release one, two, three, four, six, or salvo (all at once) tubeloads of bombs with an application of electric current. The choice is made before the dispenser is attached to the aircraft.

The bomb BDU-28/B, a completely inert item, is a dummy version of the fragmentation bomb BLU-3/B. The external appearance is the same as the BLU-3/B with revised wind tab, except that the body is painted torch red. The body assembly of the BDU-28/B consists of a cast-aluminum shell into which is threaded a solid aluminum-alloy base. The fuze assembly consists only of a cup and firing spring. When the BDU-28/B is ejected from the dispenser, air pressure lifts off the spring tab which releases the safety strap holding the vanes together. The vanes then spring outward, stabilizing and orienting the bomb in its fall. Since the bomb does not contain explosives, it will not detonate upon impact with the target.

The CBU munition is stored and transported in the cylindrical steel shipping and storage container M468. An inspection port cover is located in the rear end for monitoring the humidity indicator in the tail cone protector.

CHARACTERISTICS

Bomb dispenser SUU-7A/A:	
Length	118.42 in.
Diameter (max)	15.6 in.
Distance between suspension lugs	14 in.
Weight (approx):	
Empty	121 lb
Loaded (ready for aircraft attachment)	828 lb
Loaded (ready for packing in container)	855 lb
Center of gravity (measured from nose) (w/o nose cone plug and tail cone protector):	
Empty	55.2 in.
Loaded	62.2 in.
Bomb BDU-28/B:	
Length	3.75 in.
Diameter	2.75 in.
Weight (approx)	1.73 lb
Number of bombs in dispenser	406
Total explosive weight (approx) (lead styphnate in explosive detents) (406 bombs)	14.8 grains
Shipping and storage container M468:	
Length	136 in.
Width	31 in.
Height	29 in.
Weight:	
Empty	550 lb
With loaded dispenser	1,415 lb
Cube	70.75 in.
Center of gravity from front end	66.1 in.
Logistics:	
Quantity-distance class	1
Storage compatibility group (Army and Air Force)	B, E, or N
DOT shipping class	Exempt
DOT shipping designation	Ammunition non-explosive
Coast Guard classification	I
Aircraft speed range	350 to 550 knots
Bomb pattern dimensions	1200 ft by 50 ft (rectangular)

REFERENCES: TM 9-1325-202-12/1/OP 3195, Vol. 1/TO 11A1-5-8-1
TM 9-1325-202-35/1/OP 3217, Vol. 1/TO 11A1-5-8-22

DISPENSER AND BOMB, AIRCRAFT: CBU-9A/A

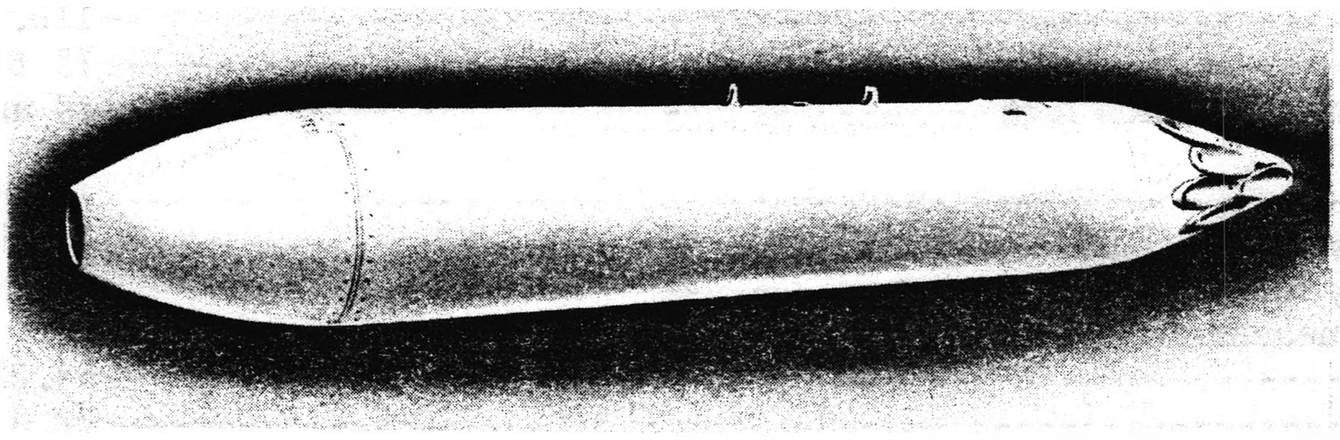

DISPENSER SUU-7B/A

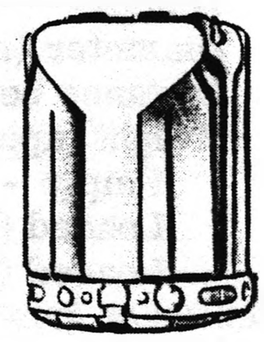

BOMB
BDU-28/B

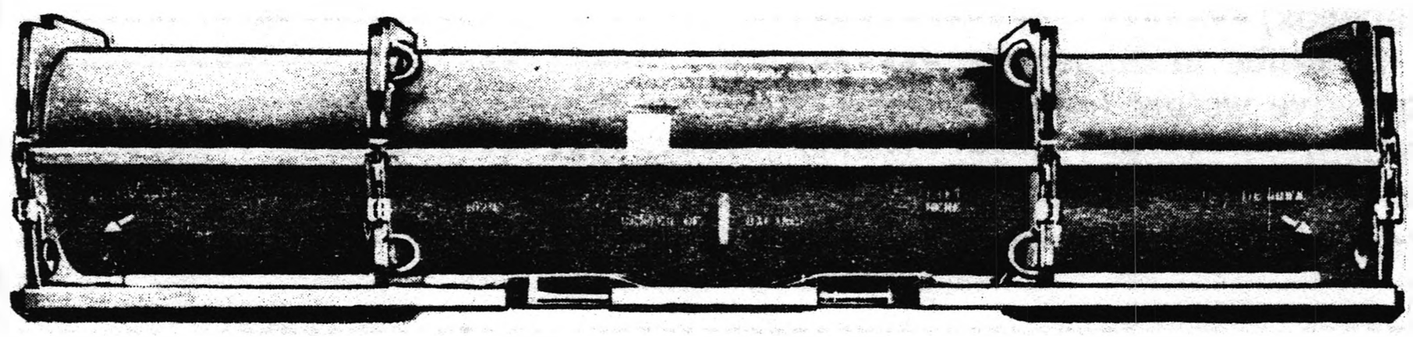

CONTAINER M468

MU-L1404

Federal Item Identification	FSN
DISPENSER AND BOMB, AIRCRAFT: CBU-9A/A	1325-763-0109
DISPENSER, BOMB: SUU-7B/A	1325-872-3163
DUMMY BOMB: BDU-28/B	1325-961-4234
SHIPPING AND STORAGE CONTAINER, BOMB DISPENSER: M468	8140-446-5366

GENERAL

The CBU-9A/A consists of a dispenser SUU-7B/A loaded with 409 dummy bombs BDU-28/B. It is designed to be mounted on Air Force aircraft F-4C, F-5, F-84, F-85, F-100, F-104, and F-105 and Navy aircraft A4D and F8U. The dispenser is designed to release two, four, or six tubeloads of bombs with each application of the pilot's firing button. The choice is made by rotating a manual selector switch on the top of the dispenser to the desired position prior to flight of the aircraft.

The bomb BDU-28/B, a completely inert item, is a dummy version of the fragmentation bomb BLU-3/B. The external appearance is the same as the BLU-3/B with revised wind tab, except that the body is painted torch red. The body assembly of the BDU-28/B consists of a cast-aluminum shell into which is threaded a solid aluminum-alloy base. The fuze assembly consists only of a cup and firing spring. When the BDU-28/B is ejected from the dispenser, air pressure lifts off the spring tab which releases the safety strap holding the vanes together. The vanes then spring outward, stabilizing and orienting the bomb in its fall. Since the bomb does not contain explosives, it will not detonate upon impact with the target.

The CBU munition is stored and transported in the cylindrical steel shipping and storage container M468. An inspection port cover is located in the rear end for monitoring the humidity indicator in the tail cone protector.

CHARACTERISTICS

Bomb dispenser SUU-7B/A:	
Length	118.42 in.
Diameter (max)	15.6 in.
Distance between suspension lugs	14 in.
Weight (approx):	
Empty	128 lb
Loaded (ready for aircraft attachment)	840 lb
Loaded (ready for packing in container)	870 lb
Center of gravity (measured from nose):	
Empty	54.22 in.
Loaded	62.5 in.
Bomb BDU-28/B:	
Length	3.75 in.
Diameter	2.75 in.
Weight (approx)	1.73 lb
Number of bombs in dispenser	409
Total explosive weight (approx) (lead styphnate in explosive detents (409 bombs)	14.8 grains
Shipping and storage container M468:	
Length	136 in.
Width	31 in.
Height	29 in.
Weight:	
Empty	550 lb
With loaded dispenser	1,430 lb
Cube	70.75 in.
Center of gravity from front end	66.1 in.
Logistics:	
Quantity-distance class	1
Storage compatibility group (Army and Air Force)	B, E, or N
DOT shipping class	Exempt
DOT shipping designation	Ammunition non-explosive
Coast Guard classification	I
Aircraft speed range	350 to 550 knots
Bomb pattern dimensions	1200 ft by 50 ft (rectangular)

REFERENCES: TM 9-1325-202-12/1/OP 3195, Vol. 1/TO 11A1-5-8-1
TM 9-1325-202-35/1/OP 3217, Vol. 1/TO 11A1-5-8-22

DISPENSER AND BOMB, AIRCRAFT: CBU-9B/A

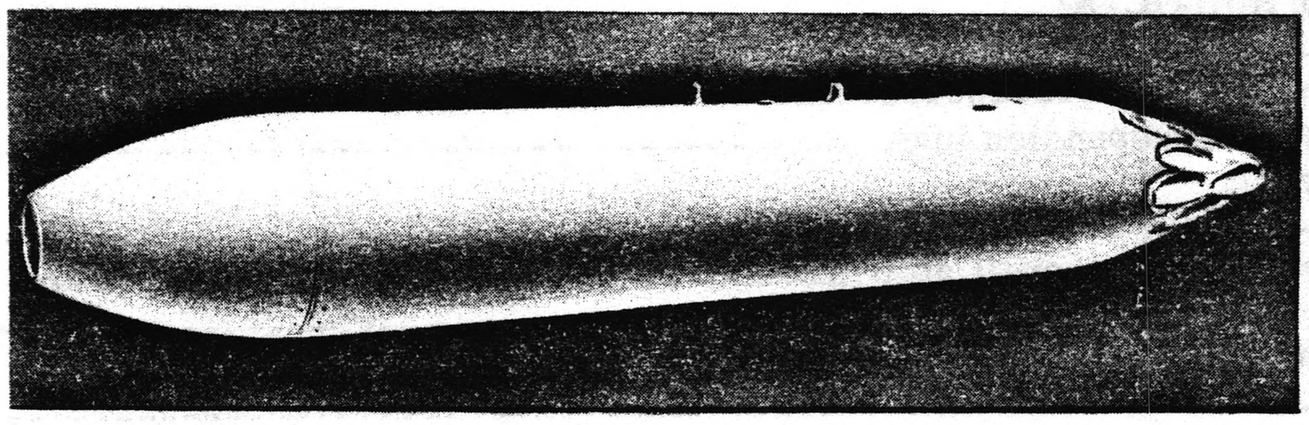

DISPENSER SUU-7C/A

BOMB
BDU-28/B

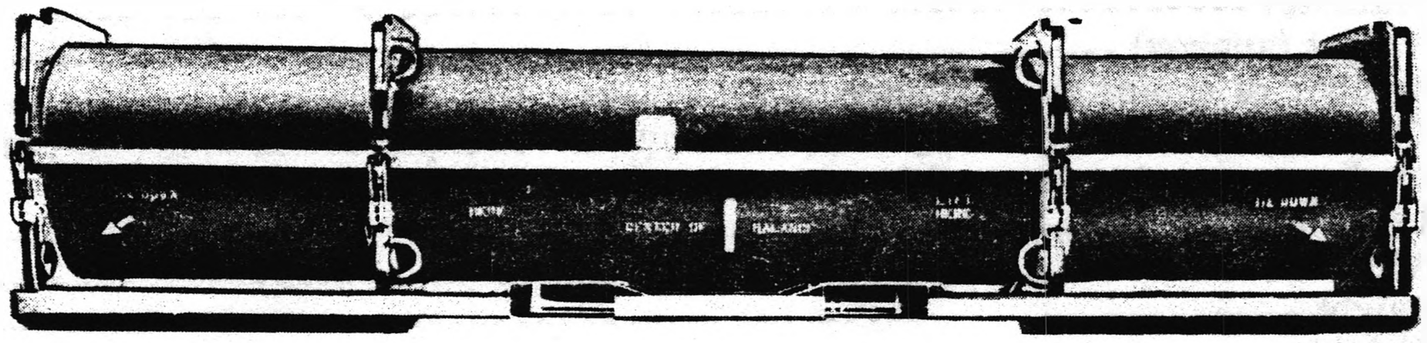

CONTAINER M468

MU-L1894

Federal Item Identification	FSN
DISPENSER AND BOMB, AIRCRAFT: CBU-9B/A	1325-937-5675
DISPENSER, BOMB: SUU-7C/A	1325-927-1162
DUMMY BOMB: BDU-28/B	1325-961-4234
SHIPPING AND STORAGE CONTAINER, BOMB DISPENSER: M468	8140-446-5366

GENERAL

The CBU-9B/A consists of a dispenser SUU-7C/A loaded with 409 dummy bombs BDU-28/B. It is designed to be mounted on Air Force aircraft F-4C, F-5, F-84, F-85, F-100, F-104, F-105, and Navy aircraft A4D and F8U. The dispenser is designed to release two, four, or six tubeloads of bombs with each application of the pilot's firing button. In addition, there is also a salvo firing on the dispenser. The choice is made by rotating a manual selector switch on the top of the dispenser to the desired position prior to flight of the aircraft.

The bomb BDU-28/B, a completely inert item, is a dummy version of the fragmentation bomb BLU-3/B. The external appearance is the same as the BLU-3/B with revised wind tab, except that the body is painted torch red. The body assembly of the BDU-28/B consists of a cast-aluminum shell into which is threaded a solid aluminum-alloy base. The fuze assembly consists only of a cup and firing spring. When the BDU-28/B is ejected from the dispenser, air-pressure lifts off the spring tab which releases the safety strap holding the vanes together. The vanes then spring outward, stabilizing and orienting the bomb in its fall. Since the bomb does not contain explosives, it will not detonate upon impact with the target.

The CBU munition is stored and transported in the cylindrical steel shipping and storage container M468. An inspection port cover is located in the rear end for monitoring the humidity indicator in the tail cone protector.

CHARACTERISTICS

Bomb dispenser SUU-7C/A:	
Length	118.42 in.
Diameter (max)	15.6 in.
Distance between suspension lugs	14 in.
Weight (approx):	
Empty	165 lbs
Loaded (ready for aircraft attachment)	877 lbs
Loaded (ready for packing in container)	890 lbs
Center of gravity (measured from nose):	
Empty	61.34 in.
Loaded	63.55 in.
Dummy bomb BDU-28/B:	
Length	3.75 in.
Diameter	2.75 in.
Weight (approx)	1.73 lbs
Number of bombs in dispenser	409
Total explosive weight (approx) (lead styphnate in explosive detents (409 bombs)	14.8 grains
Bomb dispenser shipping and storage container M468:	
Length	136 in.
Width	31 in.
Height	29 in.
Weight:	
Empty	550 lbs
With loaded dispenser	1,430 lbs
Cube	70.75 in.
Center of gravity from front end	66.1 in.
Logistics:	
Quantity-distance class	1
Storage compatibility group	B, E, or N
DOT shipping class	Exempt
DOT shipping designation	Ammunition non-explosive
Aircraft speed range	350-550 knots

REFERENCES: TM 9-1325-202-50/1/TO 11A1-5-1-7

DISPENSER AND BOMB, AIRCRAFT: CBU-12/A

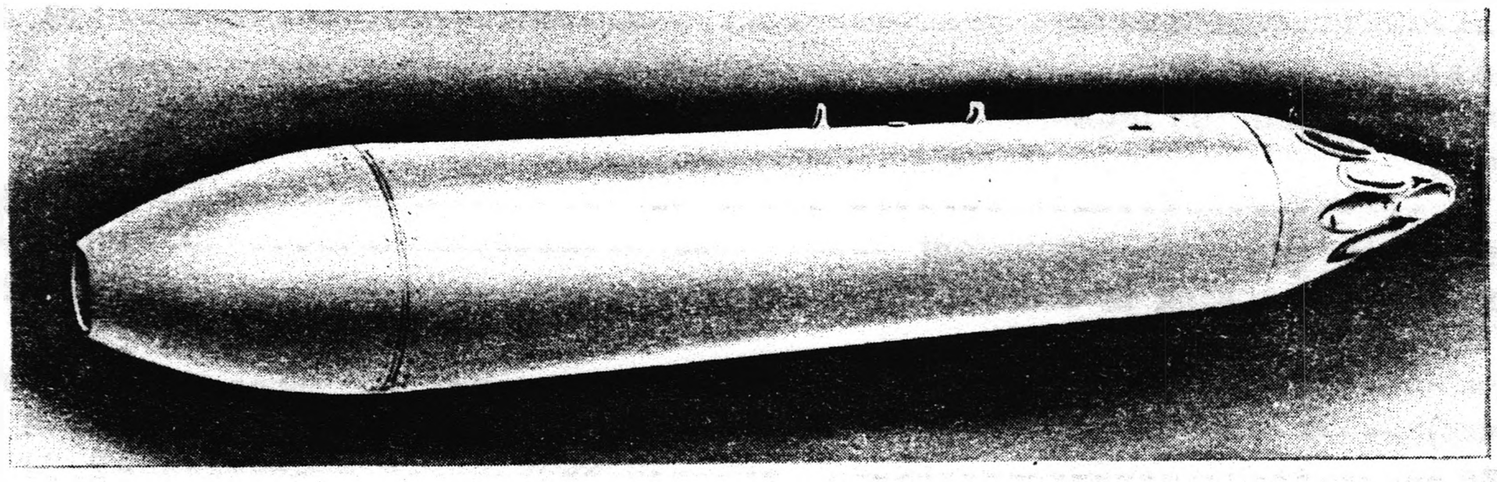

DISPENSER SUU-7B/A

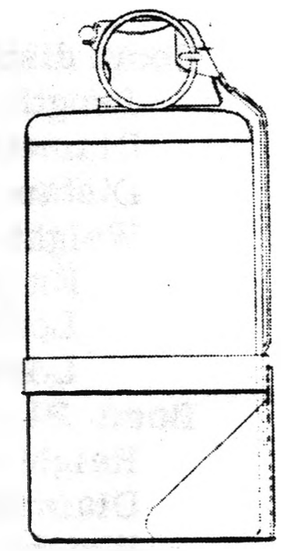

BOMB
BLU-17/B

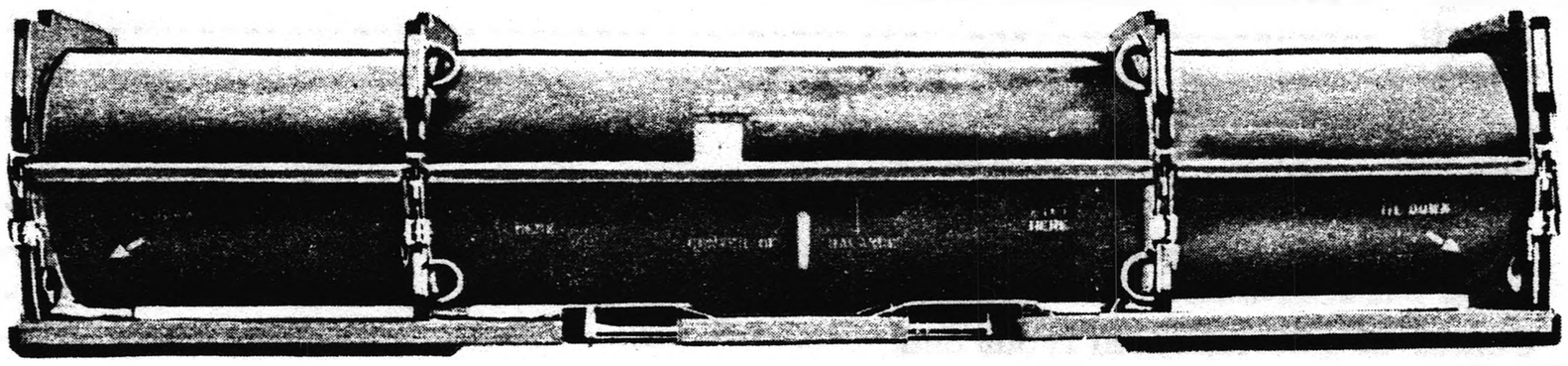

CONTAINER M468

MU-L1406

Federal Item Identification	FSN
DISPENSER AND BOMB, AIRCRAFT: CBU-12/A	1325-900-8590
DISPENSER, BOMB: SUU-7B/A	1325-872-3163
BOMB, SMOKE: BLU-17/B	1325-900-8591
SHIPPING AND STORAGE CONTAINER, BOMB DISPENSER: M468	8140-446-5366

GENERAL

The CBU-12/A is designed to be mounted on Air Force aircraft F-4C, F-5, F-84, F-86, F-100, F-104, F-105 and Navy aircraft A4D and F8U. It is a white phosphorus smoke-producing munition. The dispenser contains 19 thin-walled, anodized aluminum tubes. Sixteen tubes are loaded with 213 smoke bombs BLU-17/B. Tubes A, B, and C are empty. The dispenser is designed to release two, four, or six tubeloads of bombs with each application of the pilot's firing button. The choice is made by rotating a manual selector switch on the top of the dispenser to the desired position prior to flight of the aircraft.

The smoke bomb BLU-17/B is a small, incendiary smoke (WP) bomb that detonates above the ground. Upon detonation, the bomb scatters particles of steel and dense white phosphorus smoke over a 35-yard-radius area. When the bomb is ejected from the dispenser, air-pressure lifts off the spring tab which releases the lever to the bomb body. As the lever moves outward, it releases pressure on the spring-actuated striker which rotates about a hinge pin and strikes the primer. The primer ignites the delay charge which, after a delay of 4 to 5 seconds, explodes the burster.

The CBU munition is stored and transported in the cylindrical steel shipping and storage container M468. An inspection port cover is located in the rear end for monitoring the humidity indicator in the tail cone protector.

CHARACTERISTICS

Bomb dispenser SUU-7B/A:	
Length	118.42 in.
Diameter (max)	15.6 in.
Distance between suspension lugs	14 in.
Weight (approx):	
Empty	128 lb
Loaded, ready for aircraft attachment	620 lb
Loaded, ready for packing in container	768 lb
Bomb BLU-17/B:	
Height w/fuze	5.7 in.
Diameter (max)	2.74 in.
Weight w/fuze	2.31 lb
Number of bombs in dispenser	213
Total explosive weight (approx) (213 bombs)	234.3 lb
Shipping and storage container M468:	
Length	136 in.
Width	31 in.
Height	29 in.
Weight:	
Empty	550 lb
With loaded dispenser	1,328 lb
Cube	70.75 cu ft
Center of gravity from front end	66.1 in.
Logistics:	
Quantity-distance class	5
Storage compatibility group (Army and Air Force)	A
Chemical group	C
DOT shipping class	A
DOT shipping designation	Explosive Bomb(s) (White Phosphorus)
Coast Guard classification	II-D
Aircraft speed range	350 to 550 knots

REFERENCES: TM 9-1325-208-15/TO 11A1-5-16-2

DISPENSER AND BOMB, AIRCRAFT: CBU-12A/A

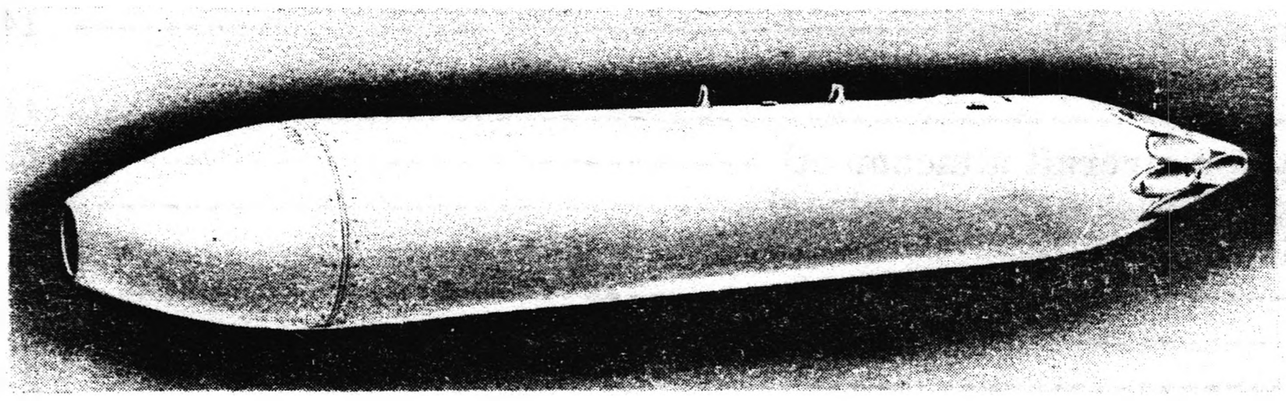

DISPENSER SUU-7C/A

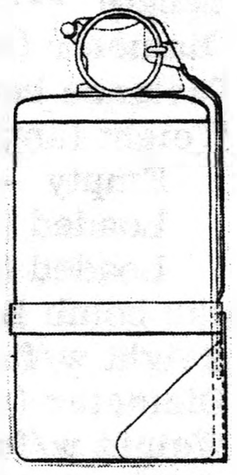

BOMB
BLU-17/B

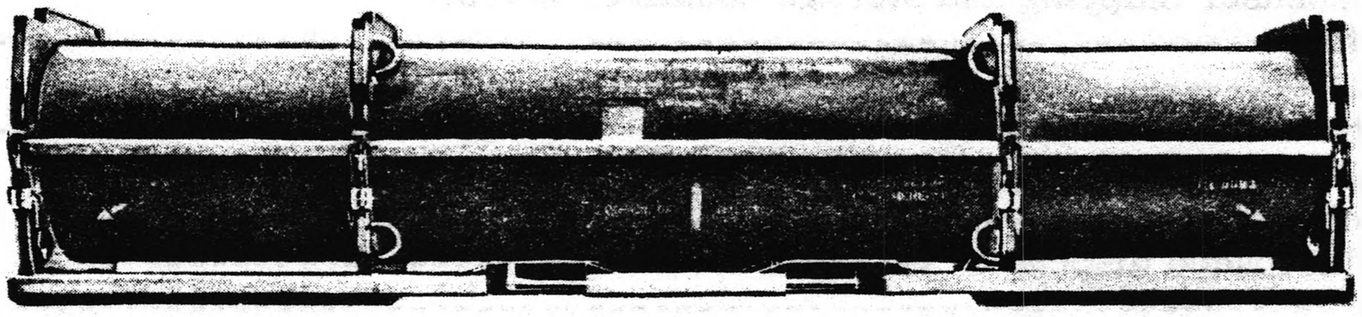

CONTAINER M468

MU-L1895

Federal Item Identification	FSN
DISPENSER AND BOMB, AIRCRAFT: CBU-12A/A	1325-087-6404
DISPENSER, BOMB: SUU-7C/A	1325-927-1162
BOMB, SMOKE: BLU-17/B	1325-900-8591
SHIPPING AND STORAGE CONTAINER, BOMB DISPENSER: M468	8140-446-5366

GENERAL

The CBU-12A/A is designed to be mounted on Air Force aircraft F-4C, F-5, F-84, F-86, F-100, F-104, F-105, and Navy aircraft A4D and F8U. It is a white phosphorus smoke-producing munition. The dispenser contains 19 thin-walled, anodized aluminum tubes. Sixteen tubes are loaded with 213 smoke bombs BLU-17/B. Tubes A, B, and C are empty. The dispenser is designed to release two, four, or six tubeloads of bombs with each application of the pilot's firing button. In addition, there is also a salvo firing on the dispenser. The choice is made by rotating a manual selector switch on the top of the dispenser to the desired position prior to flight of the aircraft.

The smoke bomb BLU-17/B is a small, incendiary smoke (WP) bomb that detonates above the ground. Upon detonation, the bomb scatters particles of steel and dense white phosphorus smoke over a 35-year-radius area. When the bomb is ejected from the dispenser, air-pressure lifts off the spring tab which releases the lever to the bomb body. As the lever moves outward, it releases pressure on the spring-actuated striker which rotates about a hinge pin and strikes the primer. The primer ignites the delay charge which, after a delay of 4 to 5 seconds, explodes the burster.

The CBU munition is stored and transported in the cylindrical steel shipping and storage container M468. An inspection port cover is located in the rear end for monitoring the humidity indicator in the tail cone protector.

CHARACTERISTICS

Bomb dispenser SUU-7C/A:	
Length	118.42 in.
Diameter (max)	15.6 in.
Distance between suspension lugs	14 in.
Weight (approx):	
Empty	165 lbs
Loaded (ready for aircraft attachment)	657 lbs
Loaded (ready for packing in container)	670 lbs
Smoke bomb BLU-17/B:	
Height w/fuze	5.7 in.
Diameter (max)	2.74 in.
Weight w/fuze	2.31 lbs
Number of bombs in dispenser	213
Total explosive weight (approx) (213 bombs)	234.3 lbs
Bomb dispenser shipping and storage container M468:	
Length	136 in.
Width	31 in.
Height	29 in.
Weight:	
Empty	550 lbs
With loaded dispenser	1,328 lbs
Cube	70.75 cu ft
Center of gravity from front end	66.1 in.
Logistics:	
Quantity-distance class	5
Storage compatibility group	A
Chemical group	C
DOT shipping class	A
DOT shipping designation	Explosive Bomb(s) (White Phosphorus)
Coast Guard classification	II-D
Aircraft speed range	350 to 550 knots

REFERENCES: TM 9-1325-202-50/1/TO 11A1-5-1-7

DISPENSER AND BOMB, AIRCRAFT: CBU-14/A

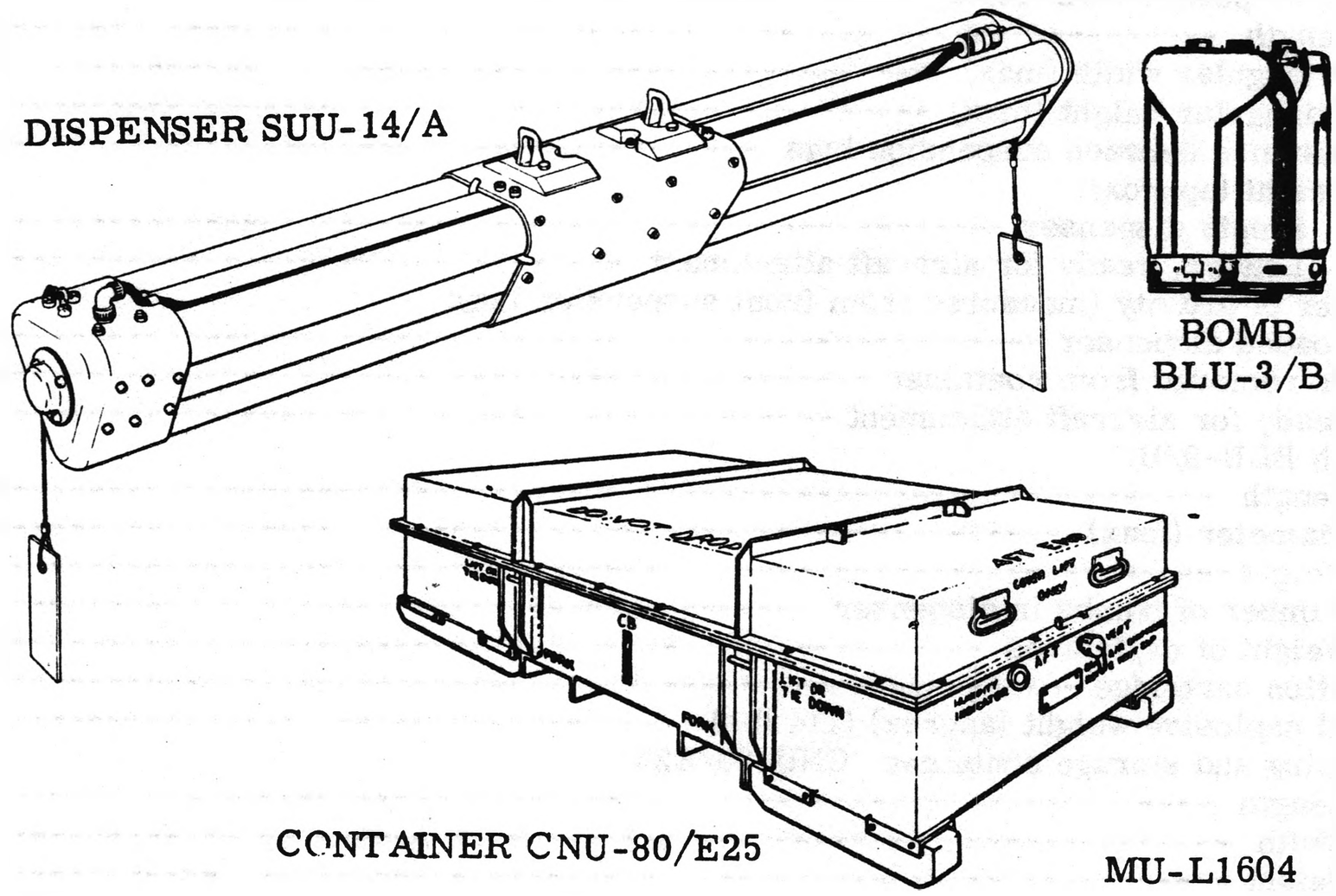

Federal Item Identification	FSN
DISPENSER AND BOMB, AIRCRAFT: CBU-14/A	1325-867-5399
DISPENSER, BOMB: SUU-14/A	1325-904-9384
BOMB, FRAGMENTATION: BLU-3/B	1325-429-2972
SHIPPING AND STORAGE CONTAINER, BOMB DISPENSER: CNU-80/E25	8140-867-5398

GENERAL

The CBU-14/A is designed to be mounted on Air Force aircraft B-26, T-28, A-1E, A-1H, O2-A, A-37, and OV-10/A. It is an antimateriel munition and is used against materiel such as tanks, armored cars, armored personnel carriers, and parked aircraft. The dispenser contains six annodized-aluminum tubes that are loaded with a total of 114 fragmentation bombs BLU-3/B. The dispenser is designed to be used with adapters (except for A-26, O2-A, A-37, and OV-10/A aircraft) to provide single-tube release of bombs with each application of the firing button, or for rapid ripple ejection of all six tubes by keeping the firing button depressed.

The fragmentation bomb BLU-3/B is a small, antimateriel bomb that detonates upon impact with surfaces such as water, mud, soft earth, or any harder surfaces. Upon detonation, the bomb discharges steel balls at high velocity in a radial pattern. When the bomb is ejected from the dispenser, air-pressure lifts off the spring tab which releases the safety strap holding the vanes together. The vanes then spring outward, stabilizing and orienting the bomb in its fall and arming the high-explosive portion of the bomb. Impact with a target detonates the high-explosive filler which bursts the bomb case and drives the steel balls outward.

The CBU munition is stored and transported in the steel shipping and storage container CNU-80/E25. The container, which is rectangular in shape, contains two loaded dispensers. A humidity indicator and a vent are mounted at the aft end.

CHARACTERISTICS

Bomb dispenser SUU-14/A:	
Length	81.31 in.
Triangular width (max)	9.38 in.
Triangular height (max)	11.28 in.
Distance between suspension lugs	14 in.
Weight (approx):	
Empty dispenser	50 lb
Loaded, ready for aircraft attachment	250 lb
Center of gravity (measured from front suspension lug):	
Loaded dispenser	1.2 in.
As removed from container	7.0 in.
Ready for aircraft attachment	7.0 in.
Bomb BLU-3/B:	
Length	3.75 in.
Diameter (max)	2.75 in.
Weight	1.73 lb
Number of bombs in dispenser	114
Weight of explosives	0.352 lb
Ejection cartridge	0.5 lb
Total explosive weight (approx) (114 lbs)	40.25 lb
Shipping and storage container CNU-80/E25:	
Length	94.39 in.
Width	34.15 in.
Height	24.25 in.
Weight:	
Empty	625 lb
With loaded dispensers	1,139 lb
Cube	45.5 cu ft
Center of gravity from front end	47.20 in.
Logistics:	
Quantity-distance class:	
Army	7
Air Force	5(M)
Storage compatibility group (Army and Air Force)	G
DOT shipping class	Explosives A
DOT shipping designation	Explosive Bomb
Coast Gurad classification	VII
Aircraft speed range	100-250 knots
Bomb pattern dimensions	Single tube ejection: 350 ft long by 35 ft wide — Ripple ejection: 350 ft long by 75 ft wide.

REFERENCES: TM 9-1325-209-50 (TO 11A1-5-17-7)

DISPENSER AND BOMB, AIRCRAFT: CBU-14A/A

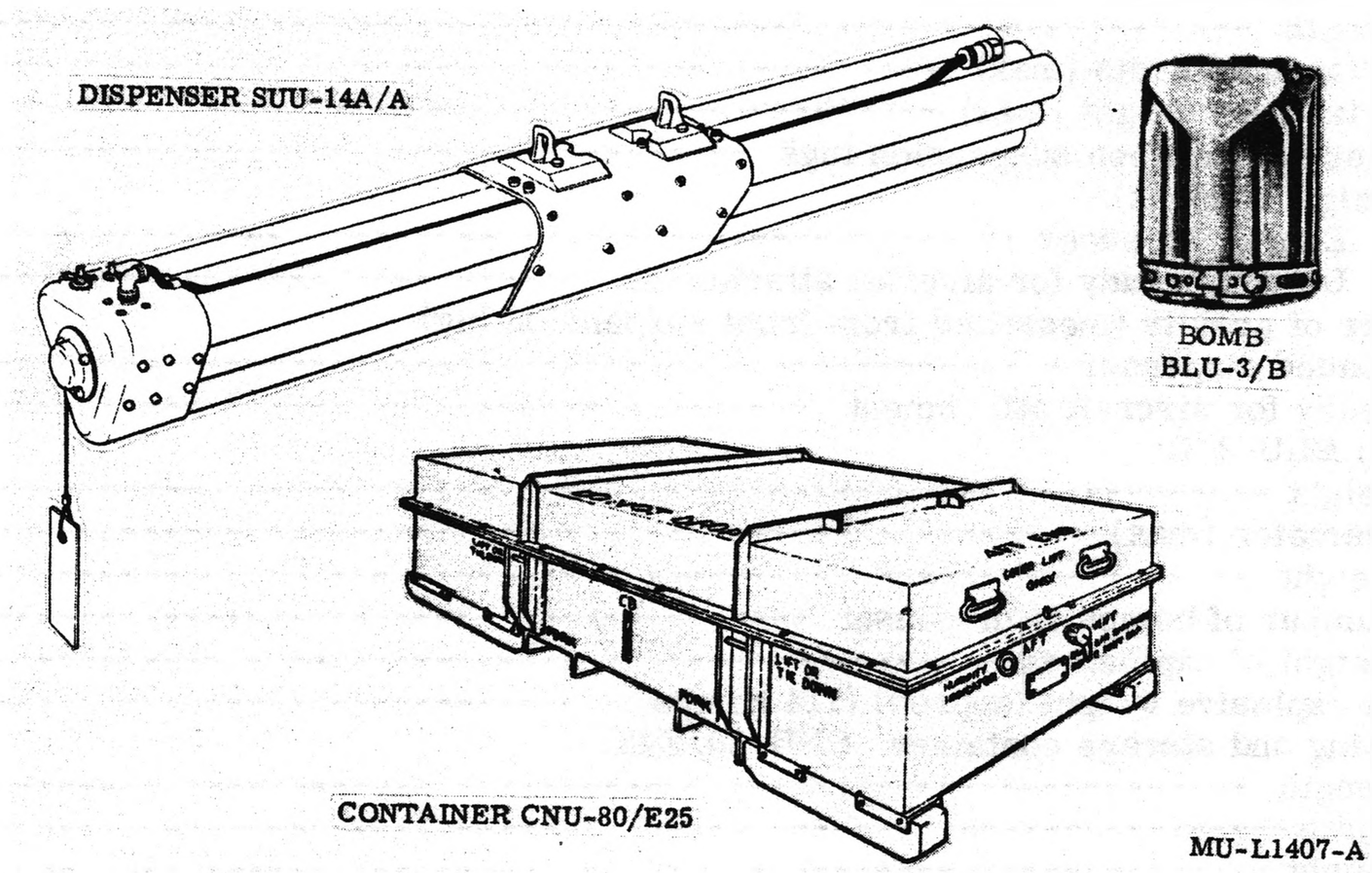

Federal Item Identification	FSN
DISPENSER AND BOMB, AIRCRAFT: CBU-14A/A	1325-925-4444
DISPENSER, BOMB: SUU-14A/A	1325-962-1119
BOMB, FRAGMENTATION: BLU-3/B	1325-429-2972
SHIPPING AND STORAGE CONTAINER, BOMB DISPENSER: CNU-80/E25	8140-867-5398

GENERAL

The CBU-14A/A is designed to be mounted on Air Force aircraft A-1E, A-1H, B-26, T-28, O2-A, A-37, and OV-10/A aircraft. It is an antimateriel munition and is used against materiel such as tanks, armored cars, armored personnel carriers, and parked aircraft. The dispenser contains six anodized-aluminum tubes that are loaded with a total of 114 fragmentation bombs BLU-3/B. The dispenser is designed for single-tube release of bombs with each application of the firing button, or for rapid ripple ejection of all six tubes by keeping the firing button depressed.

The fragmentation bomb BLU-3/B is a small, antimateriel bomb that detonates upon impact with surfaces such as water, mud, soft earth, or any harder surfaces. Upon detonation, the bomb discharges steel balls at high velocity in a radial pattern. When the bomb is ejected from the dispenser, air-pressure lifts off the apring tab which releases the safety strap holding the vanes together. The vanes then spring outward, stabilizing and orienting the bomb in its fall and arming the high-explosive portion of the bomb. Impact with a target detonates the high-explosive filler which bursts the bomb case and drives the steel balls outward.

The CBU munition is stored and transported in the steel shipping and storage container CNU-80/E25. The container is rectangular in shape and has angled stiffeners for rigidity. Each container houses two loaded dispensers which are supported by expanded polystyrene in such a way that the dispensers cannot shift. A humidity indicator and a vent are mounted at the aft end of early-model containers. Late-model containers are not sealed and do not have either a humidity indicator or a vent.

CHARACTERISTICS

Bomb dispenser SUU-14A/A:	
Length	81.31 in.
Triangular width (max)	9.38 in.
Triangular height (max)	11.28 in.
Distance between suspension lugs	14 in.
Weight (approx):	
Empty dispenser	50 lb
Loaded, ready for aircraft attachment	250 lb
Center of gravity (measured from front suspension lug):	
Loaded dispenser	1.2 in.
Ready for aircraft attachment	7.0 in.
Bomb BLU-3/B:	
Height	3.75 in.
Diameter (max)	2.75 in.
Weight	1.73 lb
Number of bombs in dispenser	114
Weight of explosives	0.352 lb
Total explosive weight (approx) (114 bombs)	40.3 lb
Shipping and storage container CNU-80/E25:	
Length	94.4 in.
Width	34.2 in.
Height	24.2 in.
Weight:	
Empty	625 lb
With loaded dispensers	1139 lb
Cube	45.5 cu ft
Center of gravity from front end	47.20 in.
Logistics:	
Quantity-distance class:	
Army	7
Air Force	5 (M)
Storage compatibility group (Army and Air Force)	G
DOT shipping class	Explosives A
DOT shipping designation	Explosive Bomb
Coast Guard classification	VII
Aircraft speed range	100-250 knots
Bomb pattern dimensions	Single tube ejection: 350 ft long by 35 ft wide — Ripple ejection: 350 ft long by 75 ft wide.

REFERENCES: TM 9-1325-209-50 (TO 11A1-5-17-7)

DISPENSER AND BOMB, AIRCRAFT: CBU-15/A

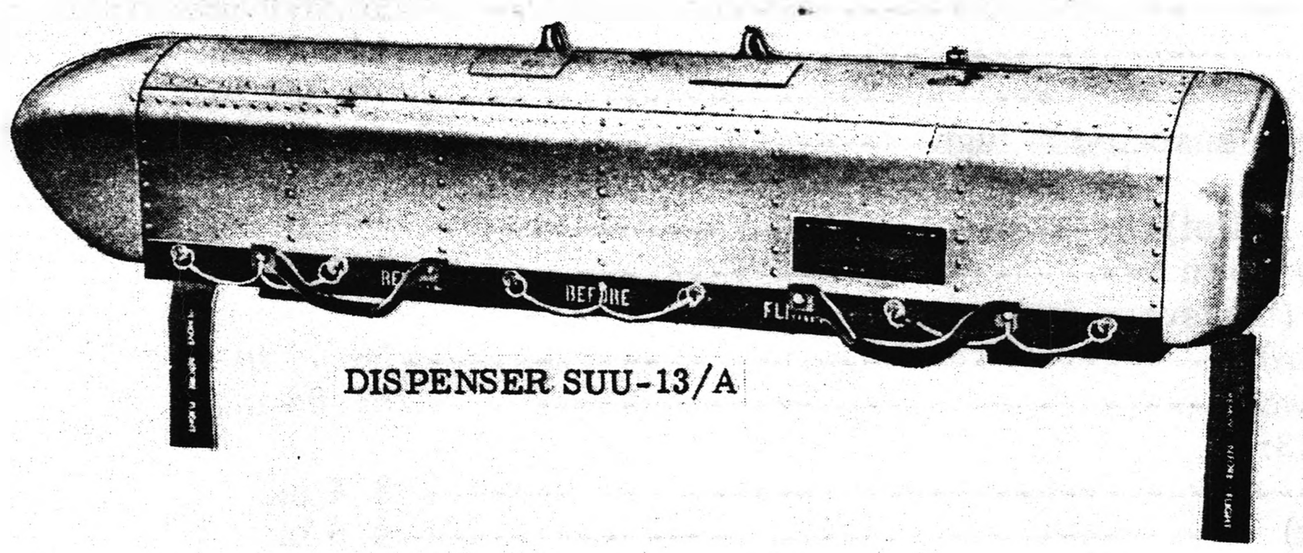

DISPENSER SUU-13/A

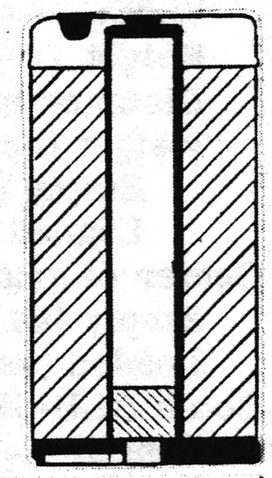

BOMB BLU-19/B23

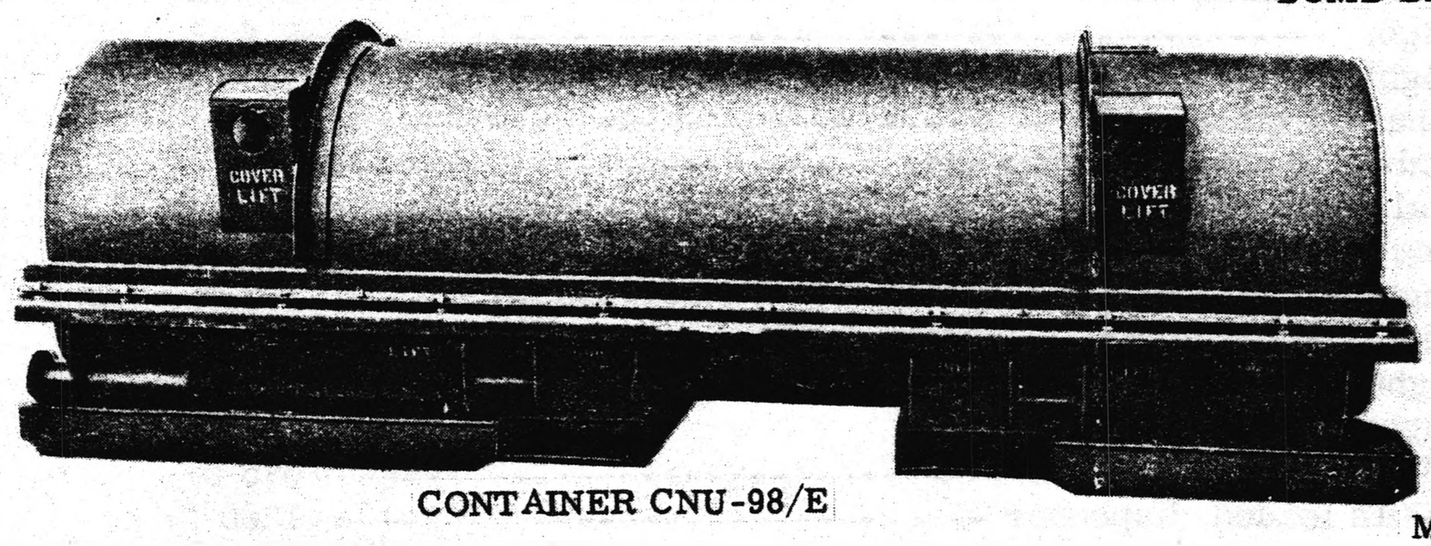

CONTAINER CNU-98/E

MU-L2227

Federal Item Identification	FSN
DISPENSER AND BOMB, AIRCRAFT: CBU-15/A	1325-122-5001
DISPENSER, BOMB: SUU-13/A	1325-788-5305
BOMB, CHEMICAL: BLU-19/B23	None
SHIPPING AND STORAGE CONTAINER, BOMB DISPENSER: CNU-98/E	8140-842-5720

GENERAL

The CBU-15/A is designed to be mounted on Air Force aircraft AIE, B-26K, F4C, D, and E, F-100, F-105, T-28, and F-111A. It is an antipersonnel chemical munition. The dispenser contains 40 vertical aluminum tube assemblies that are loaded with 40 bombs BLU-19/B23. The dispenser is designed to release all 40 tubeloads of bombs, in a ripple manner, with a single application of current through an intervalometer.

The bomb BLU-19/B23 is a cylindrically—shaped bomb designed for ejection from the dispenser SUU-13/A; one bomb per dispenser tube. It contains a plastic-bonded RDX central burster and chemical agent GB. The bore rider fuze FMU-50/B is armed 1.5 seconds after the bomb leaves the dispenser tube. Upon impact, the all-angles impact fuze initiates the explosive RDX pellets within the central tube of the bomb, and the lethal chemical agent is effectively disseminated by the explosion.

The CBU munition is stored and transported in the steel shipping and storage container CNU-98/E. The cover assembly is secured to the base assembly by 26 quick-acting T-bolts. The base assembly has four lifting bars mounted on exterior gussets for lifting the loaded container with a sling.

CHARACTERISTICS

Bomb dispenser SUU-13/A:	
Length	90.375 in.
Width	14.750 in.
Height	14.438 in.
Distance between suspension lugs	14 in.
Weight (approx):	
Empty (w/o pallet)	117 lb
Loaded - as flown	551 lb
Center of gravity (measured from nose):	
Empty (as flown)	53.79 in.
Loaded (as flown)	51.84 in.
Bomb BLU-19/B23:	
Length	9.4 in.
Diameter (max)	4.6 in.
Weight	8.6 lb
Weight (agent)	4.37 lb
Lethal chemical agent	(GB)
Number of bombs in dispenser	40
Total explosive weight (approx) (40 bombs)	25.3 lb
Shipping and storage container CNU-98/E:	
Length	104 in.
Width	31.5 in.
Height	31.5 in.
Weight (approx):	
Empty	675 lb
With loaded dispenser	1280 lb
Cube	59.7 cu ft
Center of gravity from front end	56 in. (approx)
Logistics:	
Quantity-distance class:	
Army	5
Air Force:	
Explosive	5
Chemical	Not available (See AFM 127-100 for storage information)
Storage compatibility group:	
Army	A
Air Force:	
Explosive	A
Chemical	A
DOT shipping class	A
DOT shipping designation	Explosive Bomb
Coast Guard classification	XI-A
Weapon effectiveness:	
Area coverage (50% casualty)	0.1 sqmi/dispenser
Optimum bomblet spacing	4.4 meters
Munition efficiency	60% (approx)
Chemical effect on body	Blurred vision, difficult breathing, convulsions, and possible death.

REFERENCES: FM 3-8; TM 3-250

DISPENSER AND BOMB, AIRCRAFT: CBU-17/A

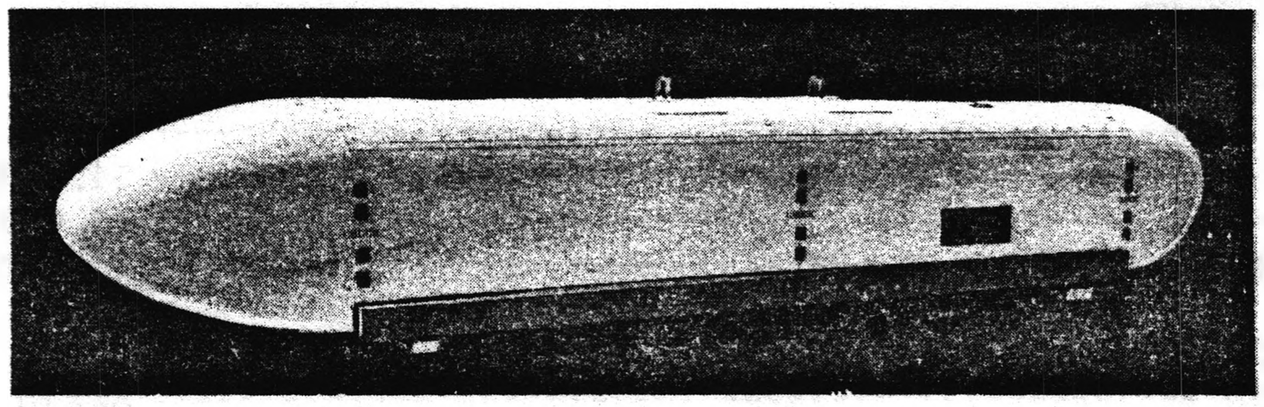

DISPENSER SUU-13/A

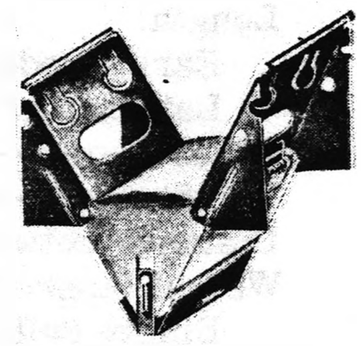

BOMB
BDU-34/B

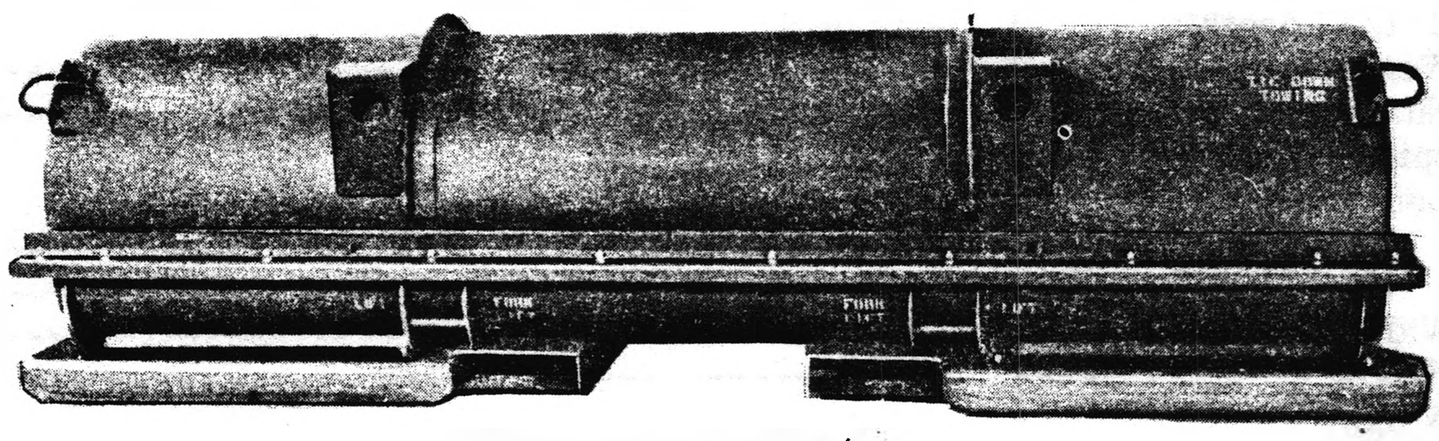

CONTAINER CNU-79/E

MU-L1410

Federal Item Identification	FSN
DISPENSER AND BOMB, AIRCRAFT: CBU-17/A	1325-872-7801
DISPENSER, BOMB: SUU-13/A	1325-788-5305
DUMMY BOMB, FRAGMENTATION: BDU-34/B	1325-923-4267
SHIPPING AND STORAGE CONTAINER, BOMB DISPENSER: CNU-79/E	8140-867-1130

GENERAL

The CBU-17/A consists of a dispenser SUU-13/A loaded with 1200 dummy bombs BDU-34/B, explosive rods, and explosive firing cartridges. The dispenser is issued loaded with bombs and is packed one per reusable shipping and storage container CNU-79/E. Dispensers can be carried on Air Force F4C, D, and E, F-84, F-86, F-100, F-104, F-105, and F-111A aircraft.

The dummy fragmentation bomb BDU-34/B simulates the bomb BLU-18/B. It is a small, completely inert bomb that is stabilized during descent by two spring-loaded vanes. The body of the bomb is unpainted aluminum; the fins are painted bright orange. When the bomb stack is ejected from the tube and the explosive rod assembly functions, the individual bombs are dispersed. The bomb vanes open and orient the bomb in the vertical or near-vertical position. Upon impact, there is no explosion or spotting flash.

The CBU munition is stored and transported in the steel shipping and storage container CNU-79/E. The cover assembly has four eyes, two at each end for tiedown and towing (on early model container only). The base assembly has four lifting bars mounted on exterior gussets for lifting the loaded container with a sling.

CHARACTERISTICS

Bomb dispenser SUU-13/A:	
Length:	
Early model	102 in.
Late model	90.375 in.
Width	14.75 in.
Height	14.438 in.
Distance between suspension lugs	14.0 in.
Weight (approx):	
Empty (with pallet)	165 lb
Loaded (as flown)	822 lb
Center of gravity (measured from nose):	
Loaded (as flown)	51.6 in.
Dummy fragmentation bomb, BDU-34/B: (Triangle 2" base x 2" height x 1-1/2" depth):	
Weight	0.48 lb
Number of bombs in dispenser	1200
Shipping and storage container CNU-79/E:	
Length:	
Early model	116 in.
Late model	104 in.
Width	31.5 in.
Height	31.5 in.
Weight:	
Empty:	
Early model	800 lb
Late model	675 lb
With loaded dispenser:	
Early model	1676 lb
Late model	1551 lb
Cube:	
Early model	64.6 cu ft
Late model	59.7 cu ft
Center of gravity from front end:	
Early model	58 in.
Late model	56.4 in.
Logistics:	
Quantity-distance class	1
Storage compatibility group (Army and Air Force)	B, E, or N
DOT shipping class	Exempt
DOT shipping designation	Ammunition non-explosive
Coast Guard classification	1

DISPENSER AND BOMB, AIRCRAFT: CBU-22/A

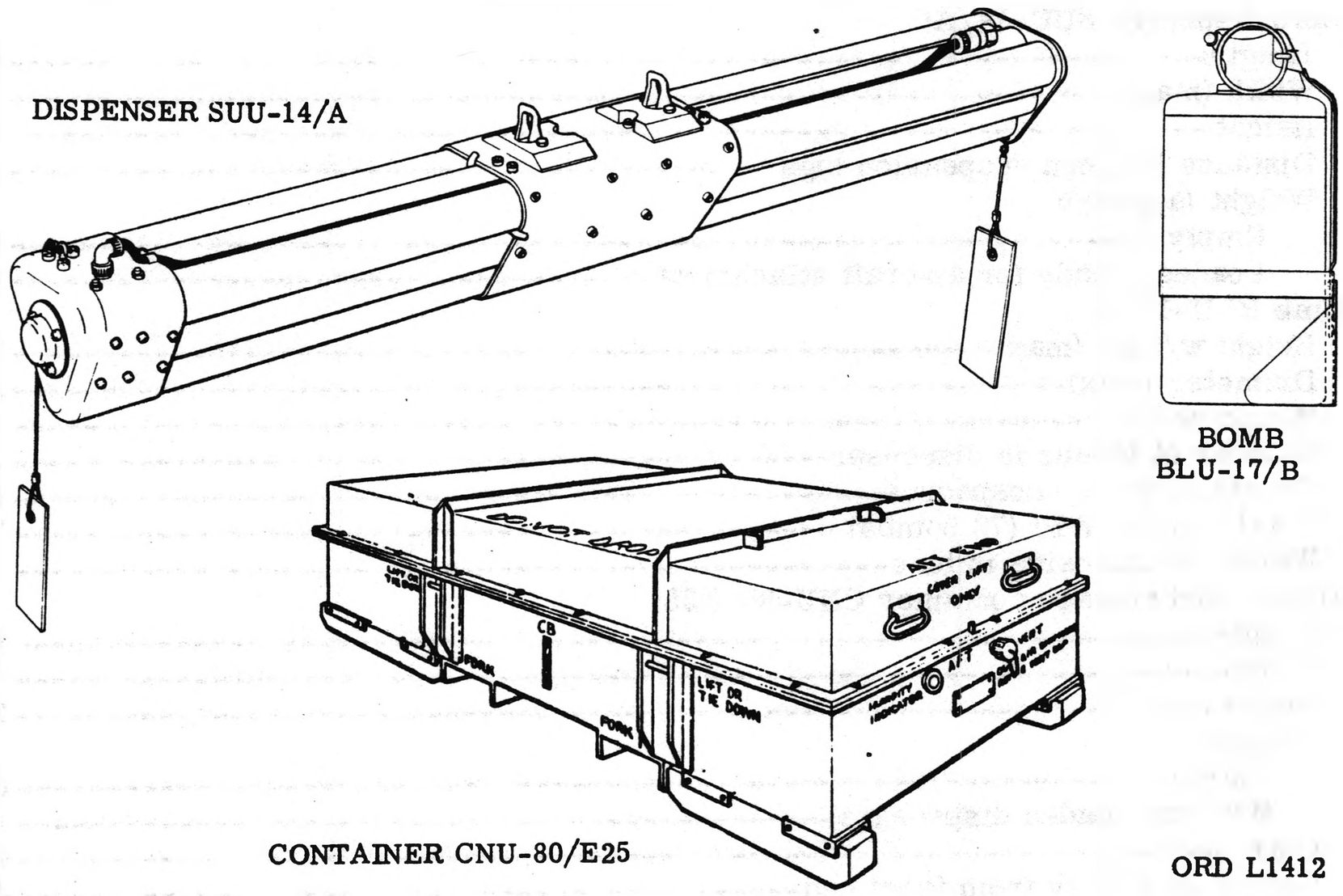

Federal Item Identification	FSN
DISPENSER AND BOMB, AIRCRAFT: CBU-22/A	1325-912-4052
DISPENSER, BOMB: SUU-14/A	1325-904-9384
BOMB, SMOKE: BLU-17/B	1325-900-8591
SHIPPING AND STORAGE CONTAINER, BOMB DISPENSER: CNU-80/E25	8140-867-5398

GENERAL

The CBU-22/A is designed to be mounted on Air Force A-1E, A-1H, B-26, T-28, O2-A, A-37, and OV-10/A aircraft. It is a white phosphorus, smoke-producing munition. The dispenser contains six anodized-aluminum tubes that are loaded with 72 smoke bombs BLU-17/B. The dispenser is designed to be used with adapters (except for A-26, O2-A, A-37, and OV-10/A aircraft) to provide single-tube release of bombs with each application of the firing button, or for rapid ripple ejection of all six tubes by keeping the firing button depressed.

The smoke bomb BLU-17/B is a small, incendiary smoke (WP) bomb that detonates above the ground. Upon detonation, the bomb scatters particles of steel and dense white phosphorus smoke over a 35-yard-radius-area. When the bomb is ejected from the dispenser, air-pressure lifts off the wind tab which releases the retaining strap holding the lever to the bomb body. As the lever moves outward, it releases pressure on the spring-actuated striker which rotates about a hinge pin and strikes the primer. The primer ignites the delay charge which, after a delay of 4 to 5 seconds, explodes the burster.

The CBU munition is stored and transported in the steel shipping and storage container CNU-80/E25. The container, which is rectangular in shape, contains two loaded dispensers. A humidity indicator and a vent are mounted at the aft end.

CHARACTERISTICS

Bomb dispenser SUU-14/A:	
Length	81.31 in.
Width (max)	9.38 in.
Height	8.50 in.
Distance between suspension lugs	14 in.
Weight (approx):	
Empty	50 lb
Loaded, ready for aircraft attachment	226 lb
Bomb BLU-17/B:	
Height w/fuze (max)	5.7 in.
Diameter (max)	2.74 in.
Weight w/fuze	2.31 lb
Number of bombs in dispenser	72
Weight of white phosphorus	1.10 lb
Total weight (WP) (72 bombs)	79.20 lb
Weight of explosive in fuze	24 grains
Shipping and storage container CNU-80/E25:	
Length	94.4 in.
Width	34.2 in.
Height	24.3 in.
Weight:	
Empty	625 lb
With two loaded dispensers	1090 lb
Cube	45.5 cu ft
Center of gravity from front end	47.20 in.
Logistics:	
Quantity-distance class:	
Army	5
Air Force	3
Storage compatibility group (Army and Air Force)	A
Chemical group	C
DOT shipping class	Explosives A
DOT shipping designation	Explosive Bomb(s) (White Phosphorus)
Coast Guard classification	II-D
Aircraft speed range	100-250 knots

REFERENCES: TM 9-1325-209-50/TO 11A1-5-17-7

DISPENSER AND BOMB, AIRCRAFT: CBU-22A/A

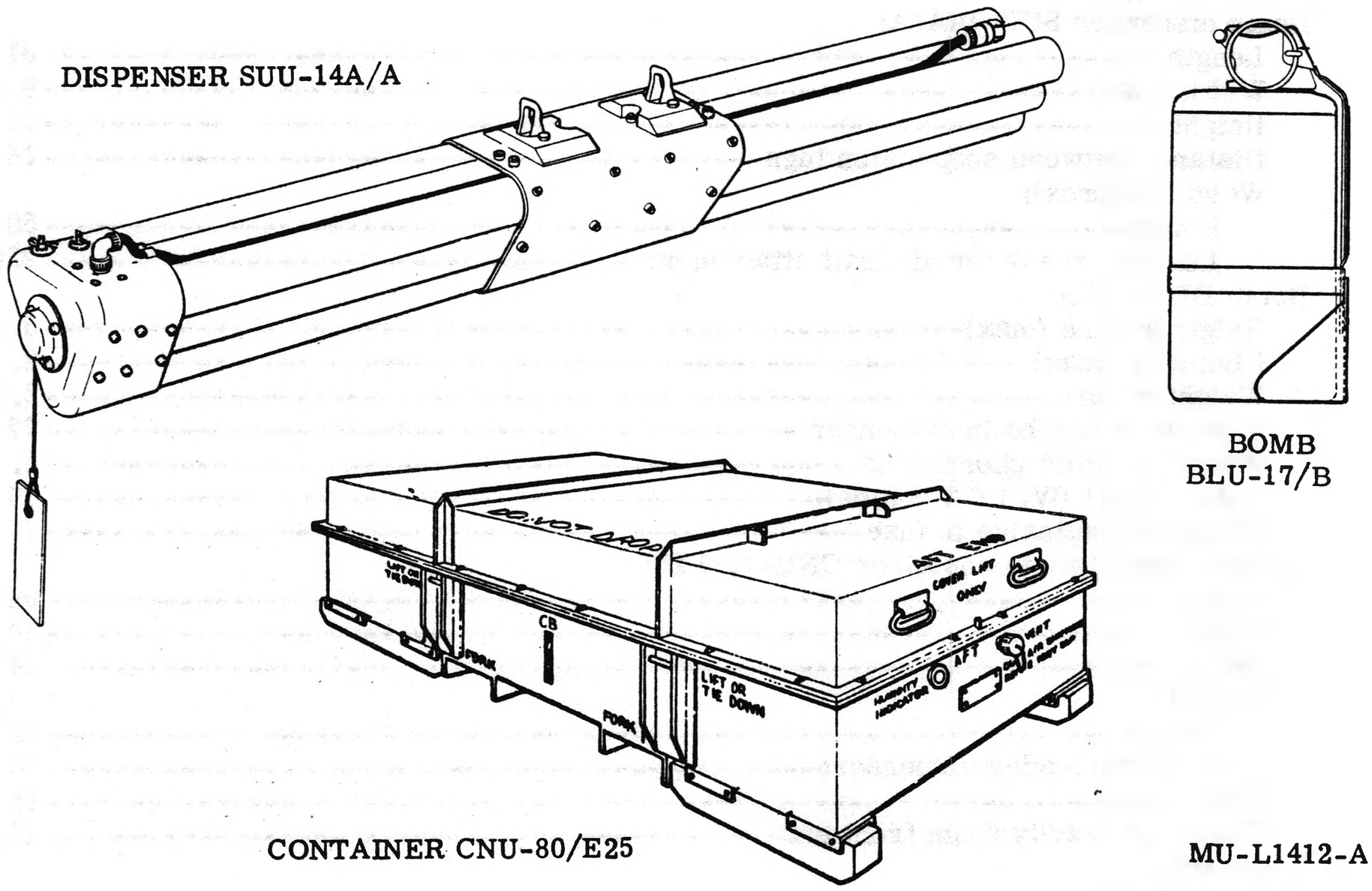

Federal Item Identification	FSN
DISPENSER AND BOMB, AIRCRAFT: CBU-22A/A	1325-949-5421
DISPENSER, BOMB: SUU-14A/A	1325-962-1119
BOMB, SMOKE: BLU-17/B	1325-900-8591
SHIPPING AND STORAGE CONTAINER, BOMB DISPENSER: CNU-80/E25	8140-867-5398

GENERAL

The CBU-22A/A is designated to be mounted on Air Force A-1E, A-1H, B-26, T-28, O2-A, A-37, and OV-10/A aircraft. It is a white phosphorus, smoke-producing munition. The dispenser contains six anodized-aluminum tubes that are loaded with 72 smoke bombs BLU-17/B. The dispenser is designed for single-tube release of bombs with each application of the firing button, or for rapid-ripple ejection of all six tubes by keeping the firing button depressed.

The smoke bomb BLU-17/B is a small, incendiary smoke (WP) bomb that detonates above the ground. Upon detonation, the bomb scatters particles of steel and dense white phosphorus smoke over a 35-yard-radius-area. When the bomb is ejected from the dispenser, air-pressure lifts off the wind tab which releases the retaining strap holding the lever to the bomb body. As the lever moves outward, it releases pressure on the spring-actuated striker which rotates about a hinge pin and strikes the primer. The primer ignites the delay charge which, after a delay of 4 to 5 seconds, explodes the burster.

The CBU munition is stored and transported in the steel shipping and storage container CNU-80/E25. The container is rectangular in shape and has angled stiffeners for rigidity. Each container houses two loaded dispensers which are supported by expanded polystyrene in such a way that the dispensers cannot shift. A humidity indicator and a vent are mounted at the aft end of early-model containers. Late-model containers are not sealed and do not have either a humidity indicator or a vent.

CHARACTERISTICS

Bomb dispenser SUU-14A/A:	
Length	81.31 in.
Width (max)	9.38 in.
Height	11.28 in.
Distance between suspension lugs	14 in.
Weight (approx):	
Empty	50 lb
Loaded, ready for aircraft attachment	226 lb
Bomb BLU-17/B:	
Height w/fuze (max)	5.7 in.
Diameter (max)	2.74 in.
Weight w/fuze	2.31 lb
Number of bombs in dispenser	72
Weight of white phosphorus	1.10 lb
Total weight (WP) (72 bombs)	79.20 lb
Weight of explosive in fuze	24 grains
Shipping and storage container CNU-80/E25:	
Length	94.4 in.
Width	34.2 in.
Height	24.2 in.
Weight:	
Empty	625 lb
With two loaded dispensers	1091 lb
Cube	45.5 cu ft
Center of gravity from front end	47.20 in.
Logistics:	
Quantity-distance class:	
Army	5
Air Force	3
Storage compatibility group (Army and Air Force)	A
Chemical group	C
DOT shipping class	Explosives A
DOT shipping designation	Explosive Bomb(s) (White Phosphorus)
Coast Guard classification	II-D
Aircraft speed range	100-250 knots

REFERENCES: TM 9-1325-209-50 (TO 11A1-5-17-7)

DISPENSER AND BOMB, AIRCRAFT: CBU-24A/B

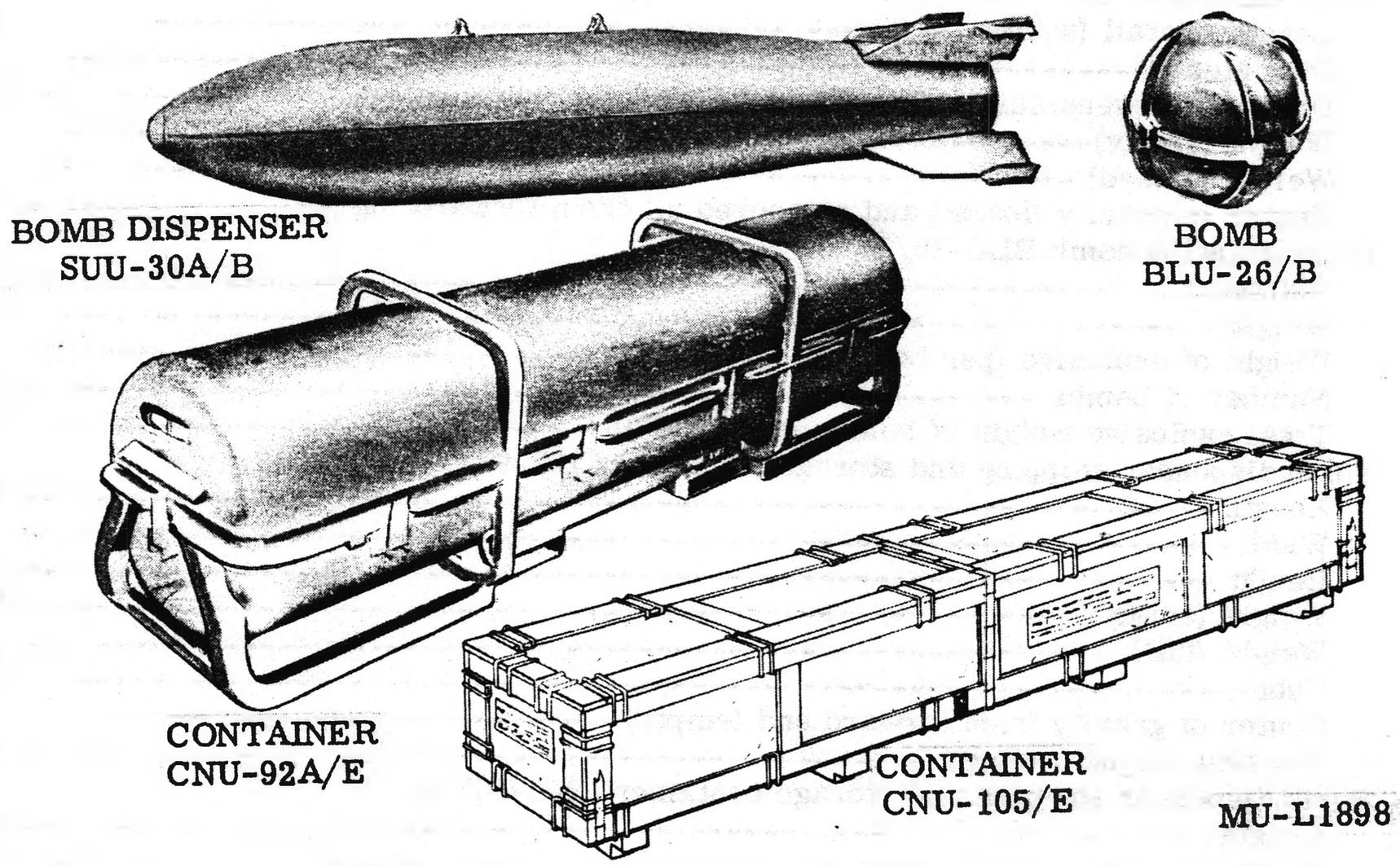

Federal Item Identification	FSN
DISPENSER AND BOMB, AIRCRAFT: CBU-24A/B (in CNU-92A/E)	1325-832-5229
DISPENSER AND BOMB, AIRCRAFT: CBU-24A/B (in CNU-105/E)	1325-935-2020
DISPENSER, BOMB: SUU-30A/B	1325-832-5231
BOMB, FRAGMENTATION: BLU-26/B	1325-916-2227
SHIPPING AND STORAGE CONTAINER, BOMB DISPENSER: CNU-92A/E	8140-832-5232
SHIPPING AND STORAGE CONTAINER, BOMB DISPENSER: CNU-105/E	8140-ND000113G

GENERAL

The CBU-24A/B is an aircraft-launched, free-fall, unguided, cluster bomb intended for tactical use against such targets as light materiel and personnel. It is designed for use on aircraft equipped with standard 14-inch spaced bomb rack or pylons. The major components of the CBU-24A/B are: the dispenser SUU-30A/B, the bomb BLU-26/B, and the mechanical time fuze M907E1 or M907E2. The dispenser is loaded with 670 bombs BLU-26/B.

The bomb BLU-26/B is a spin-armed, self-dispersing, fragmenting submunition that detonates upon impact. The dispenser is divided longitudinally. The two halves are locked together by a nose locking cap forward and a plate at the aft end. Upon release, the arming wire is withdrawn, initiating the fuze time-delay cycle. When the fuze functions, the dispenser opens longitudinally, releasing the payload. Upon impact, the 670 bombs BLU-26/B explode, producing a large number of small, high velocity fragments.

The CBU-24A/B is stored and transported in the steel shipping and storage container CNU-92A/E or the wooden shipping and storage container CNU-105/E.

CHARACTERISTICS

Bomb dispenser SUU-30A/B:	
Length overall (w/fuze)	93.00 in.
Diameter	16.00 in.
Distance between suspension lugs	14.00 in.
Weight (empty)	190.00 lb
Weight (loaded)	825.00 lb
Center of gravity (loaded and measured aft from forward lug)	6.00 in.
Fragmentation bomb BLU-26/B:	
Diameter	2.78 in.
Weight	0.95 lb
Weight of explosive (per bomb)	0.183 lb
Number of bombs	670
Total explosive weight of bombs (approx 670)	122.00 lb
Bomb dispenser shipping and storage container CNU-92A/E:	
Length	95.13 in.
Width	23.13 in.
Height	24.94 in.
Weight (empty)	340.00 lb
Weight (full)	1,165.00 lb
Cube	32.00 cu ft
Center of gravity from forward end (empty)	48.5 in.
Stacking height (loaded)	5 containers
Bomb dispenser shipping and storage container CNU-105/E:	
Length	94.13 in.
Width	22.25 in.
Height	25.88 in.
Weight (empty)	160.00 lb
Weight (full)	985.00 lb
Cube	32.00 cu ft
Center of gravity from forward end (empty)	41.00 in.
Stacking height (loaded)	4 containers
Logistics:	
Quantity-distance class	7
Storage compatibility group	G
DOT shipping class	A
DOT shipping designation	Explosive bomb
Coast Guard classification	VII
Aircraft speed range	400-550 knots
Bomb pattern dimensions	Variable

REFERENCE: T.O. 11A1-5-18-7

DISPENSER AND BOMB, AIRCRAFT: CBU-24/B

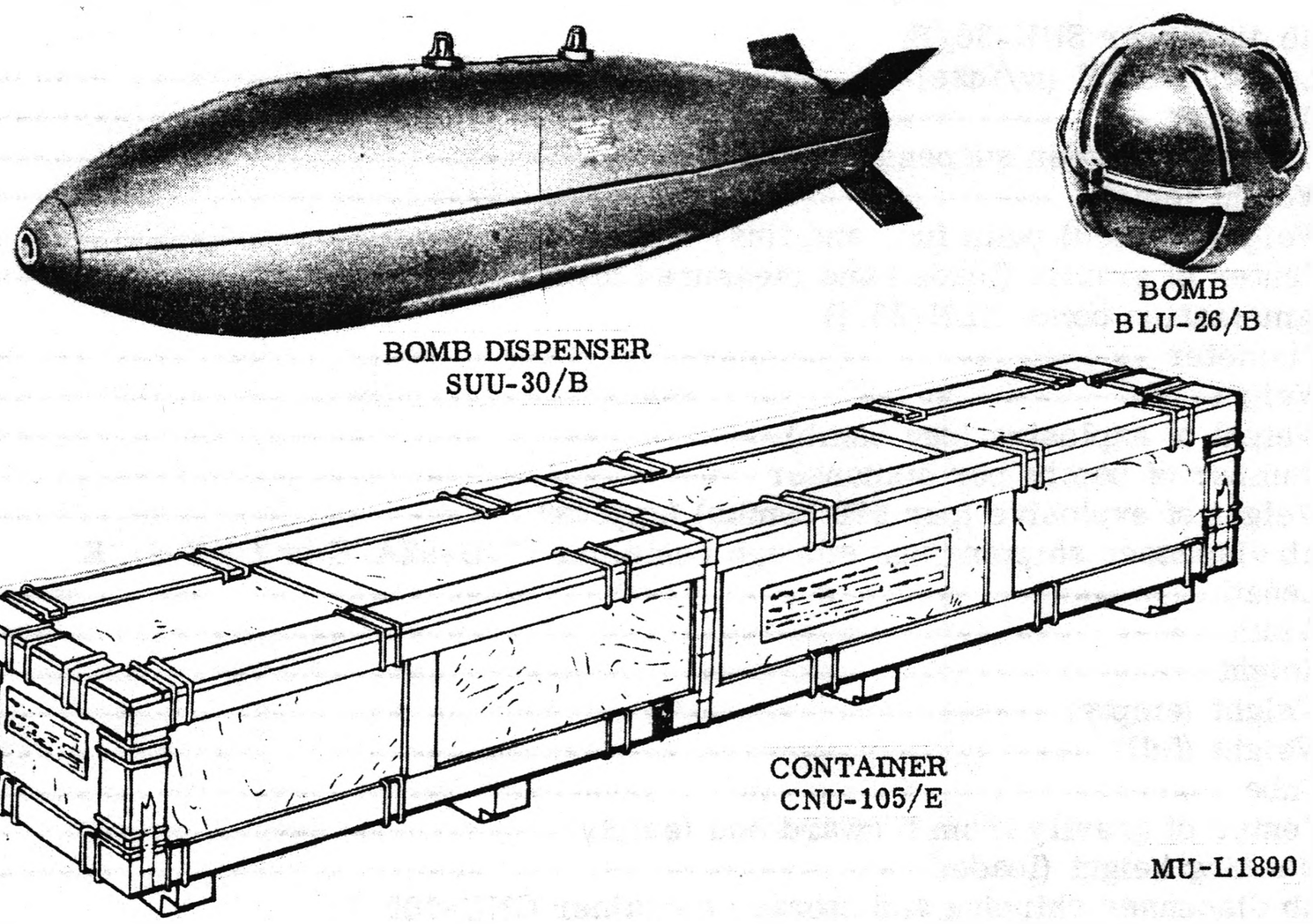

Federal Item Identification	FSN
DISPENSER AND BOMB, AIRCRAFT: CBU-24/B (in CNU-92A/E)	1325-929-8391
DISPENSER AND BOMB, AIRCRAFT: CBU-24/B (in CNU-92/E)	1325-929-8391
DISPENSER AND BOMB, AIRCRAFT: CBU-24/B (in CNU-105/E)	1325-935-6000
DISPENSER, BOMB: SUU-30/B	1325-ND-000013G
BOMB, FRAGMENTATION: BLU-26/B	1325-916-2227
SHIPPING AND STORAGE CONTAINER, BOMB DISPENSER: CNU-92A/E	8140-832-5232
SHIPPING AND STORAGE CONTAINER, BOMB DISPENSER: CNU-92/E	8140-854-0888
SHIPPING AND STORAGE CONTAINER, BOMB DISPENSER: CNU-105/E	8140-ND000113G

GENERAL

The CBU-24/B is an aircraft-launched, free-fall, unguided, cluster bomb intended for tactical use against such targets as light materiel and personnel. It is designed for use on aircraft equipped with standard 14-inch spaced bomb rack pylons. The major components of the CBU-24/B are: the dispenser SUU-30/B, the bomb BLU-26/B, and the mechanical time fuze M907E1 or M907E2. The dispenser is loaded with 670 bombs BLU-26/B.

The bomb BLU-26/B is a spin-armed, self-dispersing, fragmenting submunition that detonates upon impact. The dispenser is divided longitudinally. The two halves are locked together by a nose locking cap forward and a plate at the aft end. The dispenser has tail fins which impart spin to the dispenser when it is released from the aircraft. Upon release, the arming wire is withdrawn, initiating the fuze time-delay cycle. When the fuze functions, the dispenser opens longitudinally, releasing the payload. Upon impact, the 670 bombs BLU-26/B explode, producing a large number of small, high-velocity fragments.

The CBU-24/B is stored and transported in the steel shipping and storage container CNU-92A/E, 92/E, or the wooden shipping and storage container CNU-105/E.

CHARACTERISTICS

Bomb dispenser SUU-30/B:	
Length overall (w/fuze)	92.60 in.
Diameter	16.00 in.
Distance between suspension lugs	14.00 in.
Weight (empty)	190.00 lb
Weight (loaded) (with fuze and fins)	820 lb
Center of gravity (loaded and measured aft from forward lug)	6.00 in.
Fragmentation bomb BLU-26/B:	
Diameter	2.78 in.
Weight	0.95 lb
Weight of explosive (per bomb)	0.183 lb
Number of bombs per dispenser	670
Weight of explosive (per 670 bombs) (approx)	122 lb
Bomb dispenser shipping and storage container CNU-92A/E or CNU-92/E:	
Length	95.13 in.
Width	23.13 in.
Height	24.94 in.
Weight (empty)	340 lb
Weight (full)	1160 lb
Cube	32.00 cu ft
Center of gravity from forward end (empty)	48.5 in. (approx)
Stacking height (loaded)	5 containers
Bomb dispenser shipping and storage container CNU-105/E:	
Length	94.13 in.
Width	22.25 in.
Height	25.88 in.
Weight (empty)	160.00 lb
Weight (full)	980.00 lb
Cube	32.00 cu ft
Center of gravity from forward end (empty)	41.00 in.
Stacking height (loaded)	4 containers
Logistics:	
Quantity-distance class	7
Storage compatibility group	G
DOT shipping class	A
DOT shipping designation	Explosive Bomb
Coast Guard classification	VII
Aircraft speed range	400-550 knots
Bomb pattern dimensions	Variable

REFERENCES: T.O. 11A1-5-18-7

DISPENSER AND BOMB, AIRCRAFT: CBU-24/B (MOD)

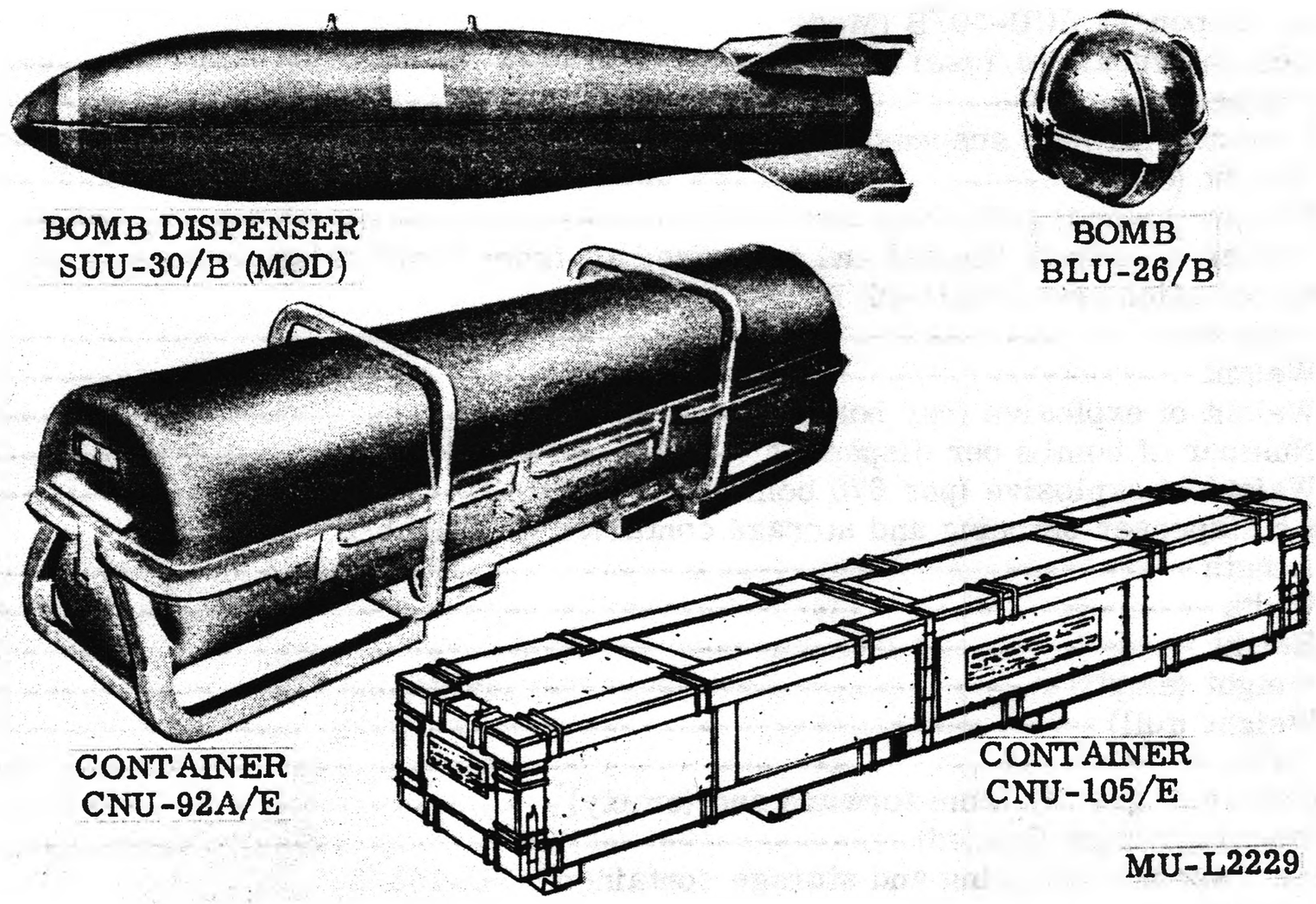

Federal Item Identification	FSN
DISPENSER AND BOMB, AIRCRAFT: CBU-24/B (MOD) (in container CNU-92A/E)	1325-929-8391
DISPENSER AND BOMB, AIRCRAFT: CBU-24/B (MOD) (in container CNU-105/E)	1325-935-6000
DISPENSER, BOMB: SUU-30/B (MOD)	1325-ND-000031G
BOMB, FRAGMENTATION: BLU-26/B	1325-916-2227
SHIPPING AND STORAGE CONTAINER, BOMB, DISPENSER: CNU-92A/E	8140-832-5232 WY21
SHIPPING AND STORAGE CONTAINER, BOMB, DISPENSER: CNU-105/E	8140-ND000113G

GENERAL

The CBU-24/B (Mod) is an aircraft-launched, free-fall, unguided, cluster bomb intended for tactical use against such targets as light materiel and personnel. It is designed for use on aircraft equipped with standard 14-inch spaced bomb rack pylons. The major components of the CBU-24/B (Mod) are: The dispenser SUU-30/B (Mod), the bomb BLU-26/B, and the mechanical time fuze M907E1 or M907E2. The dispenser is loaded with 670 bombs BLU-26/B.

The bomb BLU-26/B is a spin-armed, self-dispersing, fragmenting submunition that detonates upon impact. The dispenser is divided longitudinally. The two halves are locked together by a nose locking cap forward and a plate at the aft end. Upon release, the arming wire is withdrawn, initiating the fuze time-delay cycle (anywhere from 4 seconds to 92 seconds). When the fuze functions, the dispenser opens longitudinally, releasing the payload. When the ~~time-delay~~ bomb fuzes function, the bombs BLU-26/B explode, producing a large number of small, high-velocity fragments.

The CBU-24/B (Mod) is stored and transported in the steel shipping and storage container CNU-92A/E, or the wooden shipping and storage container CNU-105/E. The CNU-105/E has been pressure treated with preservative to withstand storage under adverse climatic conditions.

CHARACTERISTICS

Bomb dispenser SUU-30/B (Mod):	
Length overall (w/fuze)	92.60 in.
Diameter	16.00 in.
Distance between suspension lugs	14.00 in.
Weight (empty)	190.00 lb
Weight (loaded) (with fuze and fins)	820 lb
Center of gravity (loaded and measured aft from forward lug)	6.00 in.
Fragmentation bomb BLU-26/B:	
Diameter	2.78 in.
Weight	0.95 lb
Weight of explosive (per bomb)	0.183 lb
Number of bombs per dispenser	670
Weight of explosive (per 670 bombs) (approx)	122 lb
Bomb dispenser shipping and storage container CNU-92A/E:	
Length	95.13 in.
Width	23.13 in.
Height	24.94 in.
Weight (empty)	340 lb
Weight (full)	1160 lb
Cube	32.00 cu ft
Center of gravity from forward end (empty)	48.5 in. (approx)
Stacking height (loaded)	5 containers
Bomb dispenser shipping and storage container CNU-105/E:	
Length	94.13 in.
Width	22.25 in.
Height	25.88 in.
Weight (empty)	160.00 lb
Weight (full)	980.00 lb
Cube	32.00 cu ft
Center of gravity from forward end (empty)	41.00 in.
Stacking height (loaded)	4 containers
Logistics:	
Quantity-distance class	7
Storage compatibility group	G
DOT shipping class	A
DOT shipping designation	Explosive Bomb
Coast Guard classification	VII
Aircraft speed range	400-550 knots
Bomb pattern dimensions	Variable

REFERENCES: T.O. 11A1-5-18-7
NAVAIR 11-5A-1

DISPENSER AND BOMB, AIRCRAFT: CBU-24B/B

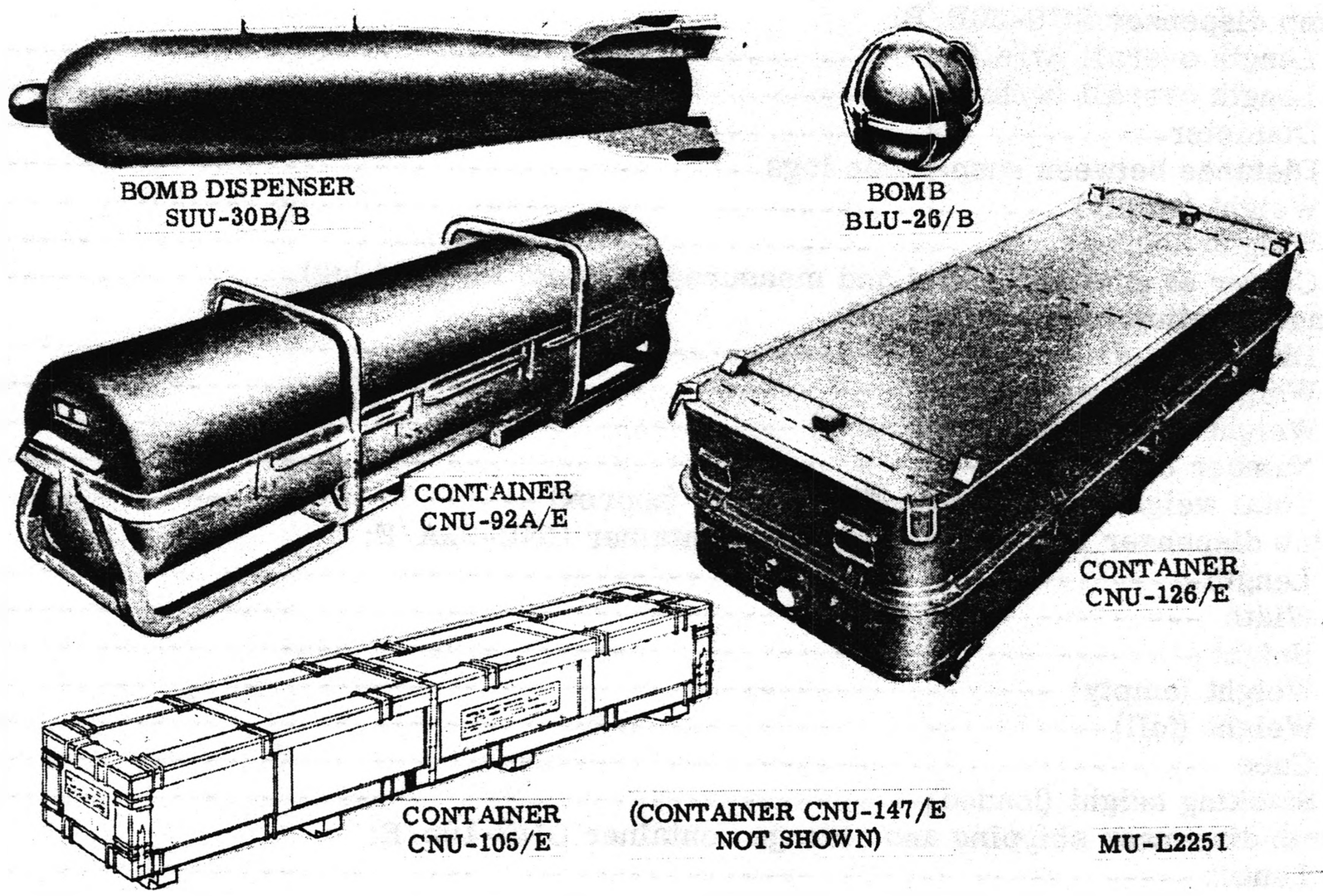

Federal Item Identification	FSN
DISPENSER AND BOMB, AIRCRAFT: CBU-24B/B (in CNU-92A/E)	1325-087-6423
DISPENSER AND BOMB, AIRCRAFT: CBU-24B/B (in CNU-105/E)	1325-935-2031
DISPENSER AND BOMB, AIRCRAFT: CBU-24B/B (in CNU-126/E)	1325-143-7092
DISPENSER AND BOMB, AIRCRAFT: CBU-24B/B (in CNU-147/E)	1325-109-9381
DISPENSER, BOMB: SUU-30B/B	1325-087-6426
BOMB, FRAGMENTATION: BLU-26/B	1325-916-2227
SHIPPING AND STORAGE CONTAINER, BOMB DISPENSER: CNU-92A/E	8140-832-5232
SHIPPING AND STORAGE CONTAINER, BOMB DISPENSER: CNU-105/E	8140-ND000113G
SHIPPING AND STORAGE CONTAINER, BOMB DISPENSER: CNU-126/E	8140NC130580GAQ
SHIPPING AND STORAGE CONTAINER, BOMB DISPENSER: CNU-147/E	1325-109-9381AQ

GENERAL

The CBU-24B/B is an aircraft-launched, free-fall, unguided, cluster bomb intended for tactical use against such targets as light materiel and personnel. It is designed for use on aircraft equipped with standard 14-inch spaced bomb rack pylons. The major components of the CBU-24B/B are: the dispenser SUU-30B/B, the bomb BLU-26/B, and the mechanical time fuze M907E1 or M907E2, or electrical fuze FMU-26A/B, or FMU-56/B. The dispenser is loaded with 670 bombs BLU-26/B.

The bomb BLU-26/B is a spin-armed, self-dispersing, fragmenting submunition that detonates upon impact. The dispenser is divided longitudinally. The two halves are locked together by a nose locking cap forward and a plate at the aft end. Upon release, the time delay cycle of the nose fuze is initiated. When the fuze functions, the dispenser opens longitudinally, releasing the payload. Upon impact, the 670 bombs BLU-26/B explode, producing a large number of small, high-velocity fragments.

One each CBU-24B/B is stored and transported in the steel shipping and storage container CNU-92A/E and the wooden shipping and storage container CNU-105/E. Two each CBU-24B/B are stored and transported in the steel container CNU-126/E and the wirebound, wooden, storage container CNU-147/E.

CHARACTERISTICS

Bomb dispenser SUU-30B/B:	
Length overall (w/o fuze)	85.49 in.
Length overall (w/fuze)	93.00 in.
Diameter	16.00 in.
Distance between suspension lugs	14.00 in.
Weight (empty)	200.00 lb
Weight (loaded)	830.00 lb
Center of gravity (loaded and measured aft from forward lug)	6.00 in.
Fragmentation bomb BLU-26/B:	
Diameter	2.78 in.
Weight	0.95 lb
Weight of explosive (per bomb)	0.183 lb
Number of bombs	670
Total weight of explosive (670 bombs) (approx)	122 lb
Bomb dispenser shipping and storage container CNU-92A/E:	
Length	95.13 in.
Width	23.13 in.
Height	24.94 in.
Weight (empty)	340.00 lb
Weight (full)	1,170.00 lb
Cube	32.00 cu ft
Stacking height (loaded)	5 containers
Bomb dispenser shipping and storage container CNU-105/E:	
Length	94.13 in.
Width	22.25 in.
Height	25.88 in.
Weight (empty)	160.00 lb
Weight (full)	990.00 lb
Cube	32.00 cu ft
Stacking height (loaded)	4 containers
Bomb dispenser shipping and storage container CNU-126/E:	
Length	97 in.
Width	37 in.
Height	24 in.
Weight (empty)	500 lb
Weight (full)	2160 lb
Cube	49.8 cu ft
Stacking height (loaded)	5 containers
Bomb dispenser shipping and storage container CNU-147/E:	
Length	39 in.
Width	89 in.
Height	37 in.
Weight (empty)	245 lb
Weight (loaded)	1895 lb
Cube	54.3 cu ft
Stacking height (loaded)	5 containers
Logistics:	
Quantity-distance class	7
Storage compatibility group	G
DOT shipping class	A
DOT shipping designation	Explosive bomb
Coast Guard classification	VII
Aircraft speed range	400-550 knots
Bomb pattern dimensions	Variable

REFERENCE: TO 11A1-5-18-7
NAVAIR 11-5A-1

DISPENSER AND BOMB, AIRCRAFT: CBU-24C/B

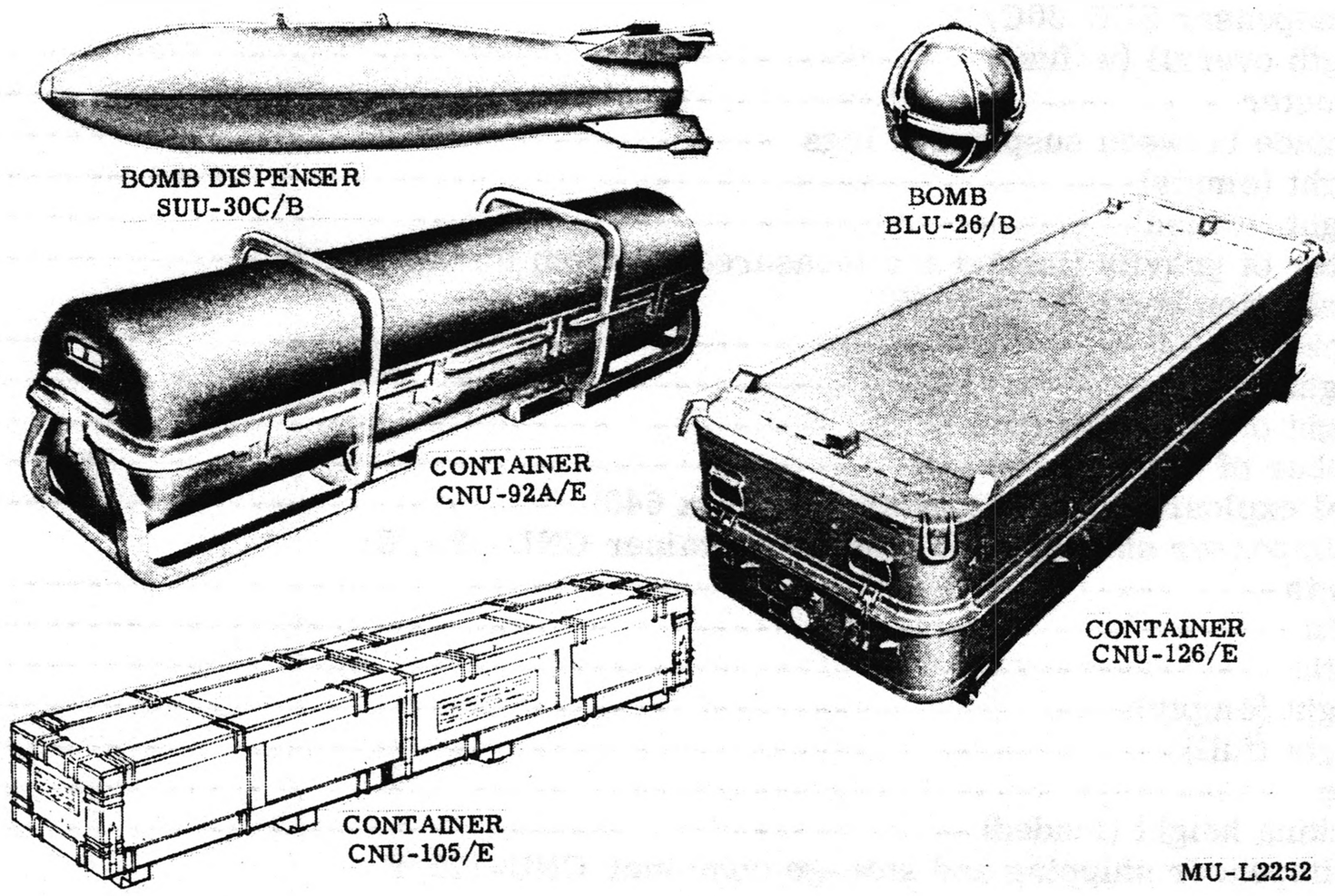

Federal Item Identification	FSN
DISPENSER AND BOMB, AIRCRAFT: CBU-24C/B (in CNU-92A/E)	1325-935-9197
DISPENSER AND BOMB, AIRCRAFT: CBU-24C/B (in CNU-105/E)	1325-809-1476
DISPENSER AND BOMB, AIRCRAFT: CBU-24C/B (in CNU-126/E)	1325-143-7093
DISPENSER, BOMB: SUU-30C/B	1325-809-1486
BOMB, FRAGMENTATION: BLU-26/B	1325-916-2227
SHIPPING AND STORAGE CONTAINER, BOMB DISPENSER: CNU-92A/E	8140-832-5232
SHIPPING AND STORAGE CONTAINER, BOMB DISPENSER: CNU-105/E	8140-ND000113G
SHIPPING AND STORAGE CONTAINER, BOMB DISPENSER: CNU-126/E	8140NC130580GAQ

GENERAL

The CBU-24C/B is an aircraft-launched, free-fall, unguided, cluster bomb intended for tactical use against such targets as light materiel and personnel. It is designed for use on aircraft equipped with standard 14-inch spaced bomb rack or pylons. The major components of the CBU-24C/B are: the dispenser SUU-30C/B, the bomb BLU-26/B, and the mechanical time fuze M907E1 or M907E2. The dispenser is loaded with 640 bombs BLU-26/B.

The bomb BLU-26/B is a spin-armed, self-dispersing, fragmenting submunition that detonates upon impact. The dispenser is divided longitudinally. The two halves are locked together by a nose locking cap forward and a plate at the aft end. Upon release, the arming wire is withdrawn, initiating the fuze time-delay cycle. When the fuze functions, the dispenser opens longitudinally, releasing the payload. Upon impact, the 640 bombs BLU-26/B explode, producing a large number of small, high velocity fragments.

One each CBU-24C/B is stored and transported in the steel shipping and storage container CNU-92A/E and the wooden shipping and storage container CNU-105/E. Two each CBU-24C/B are stored and transported in the steel container CNU-126/E.

CHARACTERISTICS

Bomb dispenser SUU-30C/B:	
Length overall (w/fuze)	93.00 in.
Diameter	16.00 in.
Distance between suspension lugs	14.00 in.
Weight (empty)	190.00 lb
Weight (loaded)	825.00 in.
Center of gravity (loaded and measured aft from forward lug)	6.00 in.
Fragmentation bomb BLU-26/B:	
Diameter	2.78 in.
Weight	0.95 lb
Weight of explosive (per bomb)	0.183 lb
Number of bombs	640
Total explosive weight of bombs (approx 640)	117.00 lb
Bomb dispenser shipping and storage container CNU-92A/E:	
Length	95.13 in.
Width	23.13 in.
Height	24.94 in.
Weight (empty)	340.00 lb
Weight (full)	1,165.00 lb
Cube	32.00 cu ft
Stacking height (loaded)	5 containers
Bomb dispenser shipping and storage container CNU-105/E:	
Length	94.13 in.
Width	22.25 in.
Height	25.88 in.
Weight (empty)	160.00 lb
Weight (full)	985.00 lb
Cube	32.00 cu ft
Stacking height (loaded)	4 containers
Bomb dispenser shipping and storage container CNU-126/E:	
Length	97
Width	37
Height	24
Weight (empty)	500 lb
Weight (full)	2160 lb
Cube	49.8 cu ft
Stacking height (loaded)	5 containers
Logistics:	
Quantity-distance class	7
Storage compatibility group	G
DOT shipping class	A
DOT shipping designation	Explosive bomb
Coast Guard classification	VII
Aircraft speed range	400-550 knots
Bomb pattern dimensions	Variable

REFERENCES: TO 11A1-5-18-7
NAVAIR 11-5A-1

DISPENSER AND BOMB, AIRCRAFT: CBU-25/A

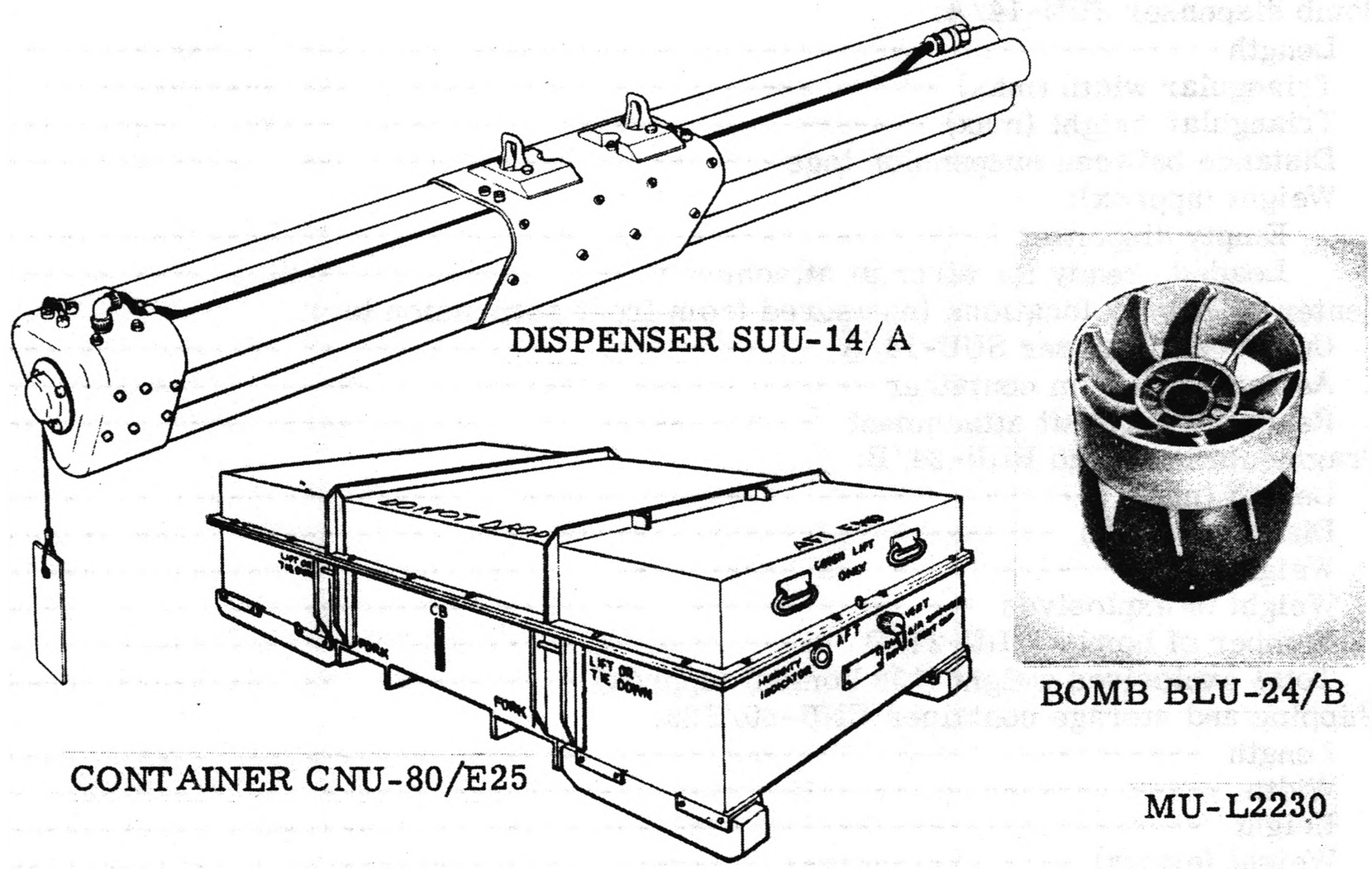

Federal Item Identification	FSN
DISPENSER AND BOMB, AIRCRAFT: CBU-25/A	1325-999-5931
DISPENSER, BOMB: SUU-14/A	1325-904-9384
BOMB, FRAGMENTATION, BLU-24/B	1325-904-9383
SHIPPING AND STORAGE CONTAINER, BOMB DISPENSER: CNU-80/E25	8140-867-5398

GENERAL

The CBU-25/A is designed to be mounted on Air Force aircraft B-26, T-28, A-1E, A-1H, O2-A, A-37, and OV-10/A. It is an anti-materiel munition and is used against materiel such as tanks, armored cars, armored personnel carriers, and parked aircraft. The dispenser contains six annodized-aluminum tubes that are loaded with a total of 132 fragmentation bombs BLU-24/B. The dispenser is designed to be used with adapters (except for A-26, O2-A, A-37, and OV-10/A aircraft) to provide single-tube release of bombs with each application of the firing button, or for rapid ripple ejection of all six tubes by keeping the firing button depressed.

The fragmentation bomb BLU-24/B (jungle bomb) consists of three major components which provide the necessary operational sequence; they are: vane, fuze assembly, and body assembly. The vane assembly provides the necessary torque for arming the bomb. The fuze assembly provides the arming and initiation sequence. The body assembly provides the explosive storage volume and lethal fragmenting case. The operation of the bomb is accomplished through a fuzing concept in which angular velocity causes arming and, as the body interacts with foliage and terrain, spin decay occurs, detonating the bomb.

The CBU munition is stored and transported in the steel shipping and storage container CNU-80/E25. The container, which is rectangular in shape, contains two loaded dispensers. A humidity indicator and a vent are mounted at the aft end.

CHARACTERISTICS

Bomb dispenser SUU-14/A:	
Length	81.31 in.
Triangular width (max)	9.38 in.
Triangular height (max)	11.28 in.
Distance between suspension lugs	14.00 in.
Weight (approx):	
Empty dispenser	50.00 lb
Loaded, ready for aircraft attachment	264 lb
Center of gravity locations (measured from front suspension lug):	
Unloaded dispenser SUU-14/A	1.2 in.
As removed from container	7.0 in.
Ready for aircraft attachment	7.0 in.
Fragmentation bomb BLU-24/B:	
Length (max)	3.707 in.
Diameter (max)	2.8 in.
Weight	1.6 lb
Weight of explosives	0.26 lb cyclotol
Number of bombs BLU-24/B	132
Total explosives weight (132 bombs) (approx)	35 lb
Shipping and storage container CNU-80/E25:	
Length	94.39 in.
Width	34.15 in.
Height	24.25 in.
Weight (empty)	625 lb
Cube	45.5 cu ft
Center of gravity from forward end	47.20 in.
Weight (with loaded dispensers)	1167 lb
Logistics:	
Quantity-distance class:	
Army	7
Air Force	5(M)
Storage compatibility group	G
DOT shipping class	Explosives A
DOT shipping designation	Explosive Bomb
Coast Guard classification	VII

REFERENCES: TM 9-1325-209-50 (TO 11A1-5-17-7)

DISPENSER AND BOMB, AIRCRAFT: CBU-25A/A

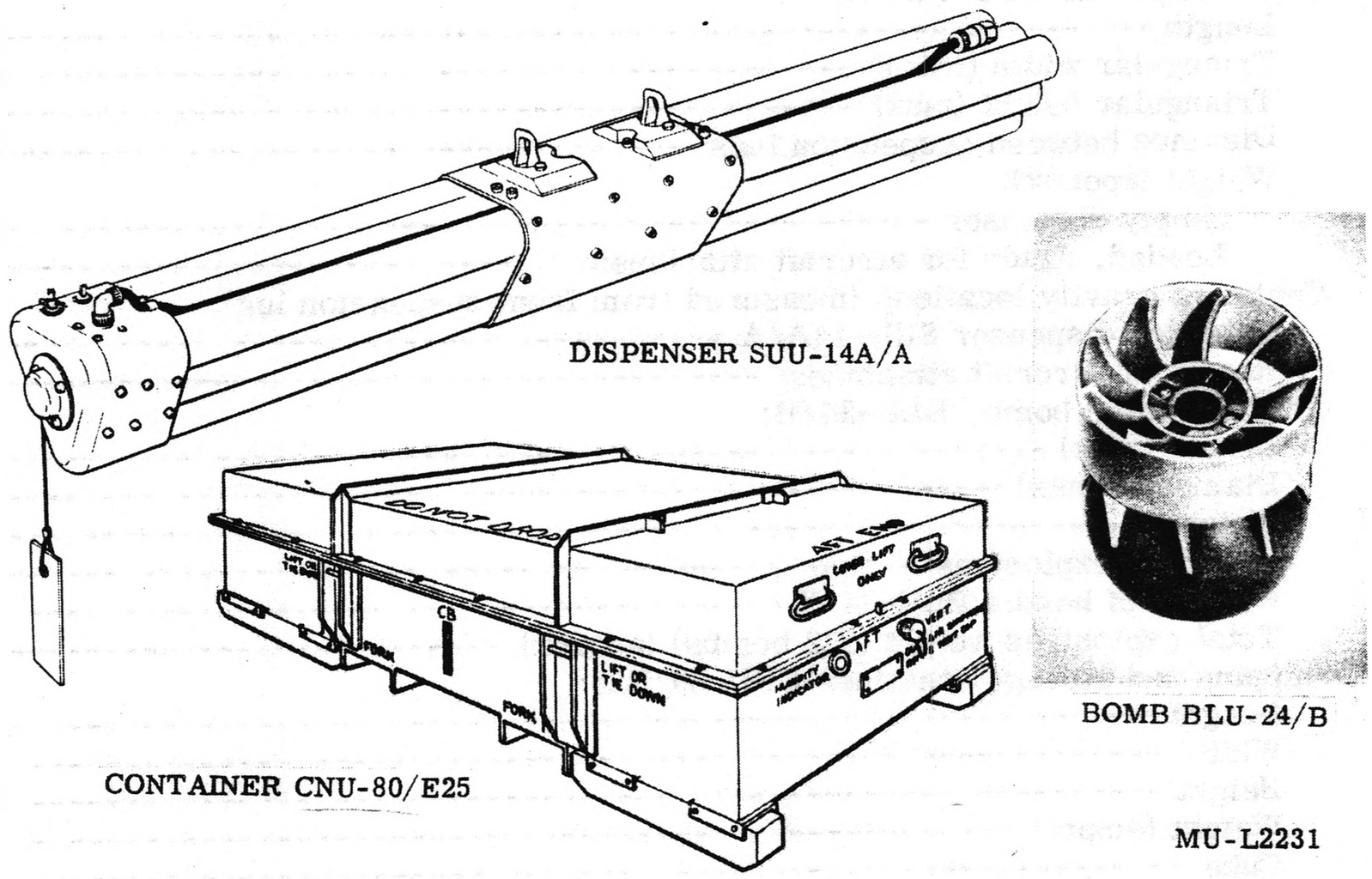

Federal Item Identification	FSN
DISPENSER AND BOMB, AIRCRAFT: CBU-25A/A	1325-933-4954
DISPENSER, BOMB: SUU-14A/A	1325-962-1119
BOMB, FRAGMENTATION: BLU-24/B	1325-904-9383
SHIPPING AND STORAGE CONTAINER, BOMB DISPENSER: CNU-80/E25	8140-867-5398

GENERAL

The CBU-25A/A is designed to be mounted on Air Force aircraft A-1E, A-1H, B-26, T-28, O2-A, A-37, and OV-10/A aircraft. It is an antipersonnel munition (sometimes referred to as the "jungle bomb") designed to penetrate jungle foliage. The dispenser contains six annodized-aluminum tubes that are loaded with a total of 132 fragmentation bombs BLU-24/B. The dispenser is designed for single-tube release of bombs with each application of the firing button, or for rapid-ripple ejection of all six tubes by keeping the firing button depressed.

The fragmentation bomb BLU-24/B consists of three major components which provide the necessary operational sequence; they are: vane, fuze assembly, and body assembly. The vane assembly provides the necessary torque for arming the bomb. The fuze assembly provides the arming and initiation sequence. The body assembly provides the explosive storage volume and lethal fragmenting case. The operation of the bomb is accomplished through a fuzing concept in which angular velocity causes arming and, as the body interacts with foliage and terrain, spin decay occurs, detonating the bomb.

The CBU munition is stored and transported in the steel shipping and storage container CNU-80/E25. The container is rectangular in shape and has angled stiffeners for rigidity. Each container houses two loaded dispensers which are supported by expanded polystyrene in such a way that the dispensers cannot shift forward or aft. A humidity indicator and a vent are mounted at the aft end of early-model containers. Late-model containers are not sealed and do not have either a humidity indicator or a vent.

CHARACTERISTICS

Bomb dispenser SUU-14A/A:	
Length	81.31 in.
Triangular width (max)	9.38 in.
Triangular height (max)	11.28 in.
Distance between suspension lugs	14.00 in.
Weight (approx):	
Empty dispenser	50.00 lb
Loaded, ready for aircraft attachment	264 lb
Center of gravity locations (measured from front suspension lug):	
Unloaded dispenser SUU-14A/A	1.2 in.
Ready for aircraft attachment	7.0 in.
Fragmentation bomb BLU-24/B:	
Length (max)	3.7 in.
Diameter (max)	2.8 in.
Weight	1.6 lb
Weight of explosives	0.26 lb cyclotol
Number of bombs BLU-24/B	132
Total explosives weight (132 bombs) (approx)	35 lb
Shipping and storage container CNU-80/E25:	
Length	94.4 in.
Width	34.2 in.
Height	24.2 in.
Weight (empty)	625 lb
Cube	45.5 cu ft
Center of gravity from forward end	47.20 in.
Weight (with loaded dispensers)	1167 lb
Logistics:	
Quantity-distance class:	
Army	7
Air Force	5(M)
Storage comptatibility group	G
DOT shipping class	Explosives A
DOT shipping designation	Explosive Bomb
Coast Guard classification	VII

REFERENCES: TM 9-1325-209-50 (TO 11A1-5-17-7)

DISPENSER AND BOMB, AIRCRAFT: CBU-25B/A

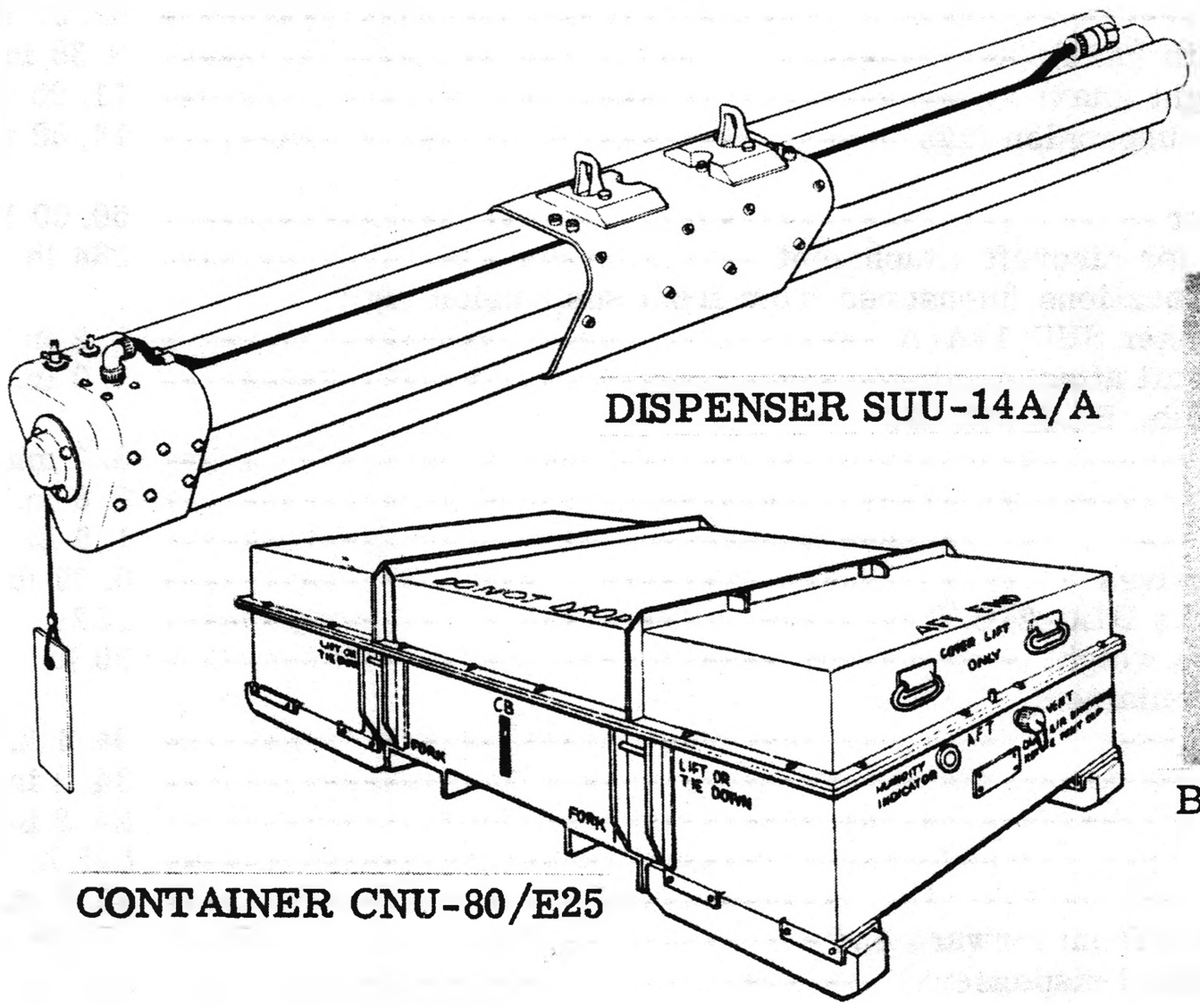

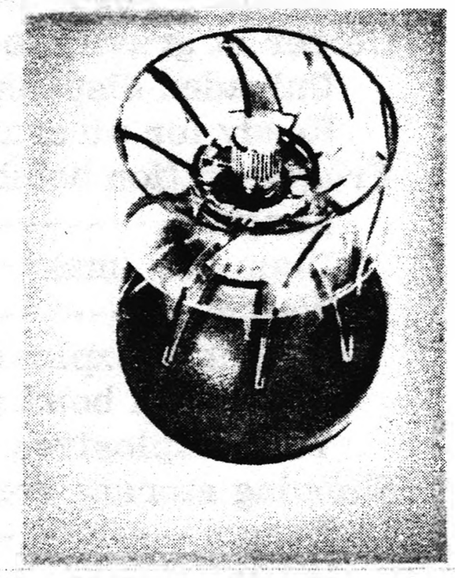

BOMB BLU-24B/B

MU-L1413-A

Federal Item Identification	FSN
DISPENSER AND BOMB, AIRCRAFT: CBU-25B/A	1325-143-8796
DISPENSER, BOMB: SUU-14A/A	1325-962-1119
BOMB, FRAGMENTATION: BLU-24B/B	None
SHIPPING AND STORAGE CONTAINER, BOMB DISPENSER: CNU-80/E25	8140-867-5398

GENERAL

The CBU-25/A is designed to be mounted on Air Force aircraft A-1E, A-1H, B-26, and T-28. The bomb is an antipersonnel munition (sometimes referred to as the "jungle bomb") designed to penetrate jungle foliage. The dispenser contains six 73-inch-long tubes that are loaded with a total of 132 fragmentation bombs BLU-24/B. A single/rapid-ripple fire selection switch is incorporated in the nose fairing assembly. The dispenser is designed for single-tube release of bombs on all four of the above aircraft with each application of the pilot's firing button, or for rapid-ripple ejection of all six tubes by keeping the firing button depressed.

The fragmentation bomb BLU-24B/B consists of three major components which provide the necessary operational sequence; they are: vane, fuze assembly, and body assembly. The vane assembly provides the necessary torque for arming the bomb. The fuze assembly provides the arming and initiation sequence. The body assembly provides the explosive storage volume and lethal fragmenting case. The operation of the bomb is accomplished through a fuzing concept in which angular velocity causes arming and, as the body interacts with foliage and terrain, spin decay occurs, detonating the bomb.

The CBU munition is stored and transported in the steel shipping and storage container CNU-80/E25. The container is rectangular in shape and has angled stiffeners for rigidity. Each container houses two loaded dispensers which are supported by expanded polystyrene in such a way that the cargo cannot shift forward or aft.

CHARACTERISTICS

Bomb dispenser SUU-14A/A:	
Length	81.31 in.
Triangular width (max)	9.38 in.
Triangular height (max)	11.28 in.
Distance between suspension lugs	14.00 in.
Weight (approx):	
Empty dispenser	50.00 lb
Loaded, ready for aircraft attachment	264 lb
Center of gravity locations (measured from front suspension lug):	
Unloaded dispenser SUU-14A/A	1.2 in.
Ready for aircraft attachment	7.0 in.
Fragmentation bomb, BLU-24B/B:	
Length	3.7 max.
Diameter (max)	2.8 in.
Weight	1.6 lb
Weight of explosives	0.26 lb
Number of bombs BLU-24B/B	132
Total explosives weight	35 lb
Shipping storage container:	
Length	94.4 in.
Width	34.2 in.
Height	24.2 in.
Weight (empty)	625 lb
Cube	45.5 cu ft
Center of gravity from forward end	47.20 in.
Weight (with loaded dispensers)	1167 lb
Logistics:	
Quantity-distance class	7
Storage compatibility group	G
DOT shipping class	A
DOT shipping designation	Explosive Bomb
Coast Guard classification	VII

REFERENCES: TM 9-1325-209-50 (TO 11A1-5-17-7)

DISPENSER AND BOMB, AIRCRAFT: CBU-26/A

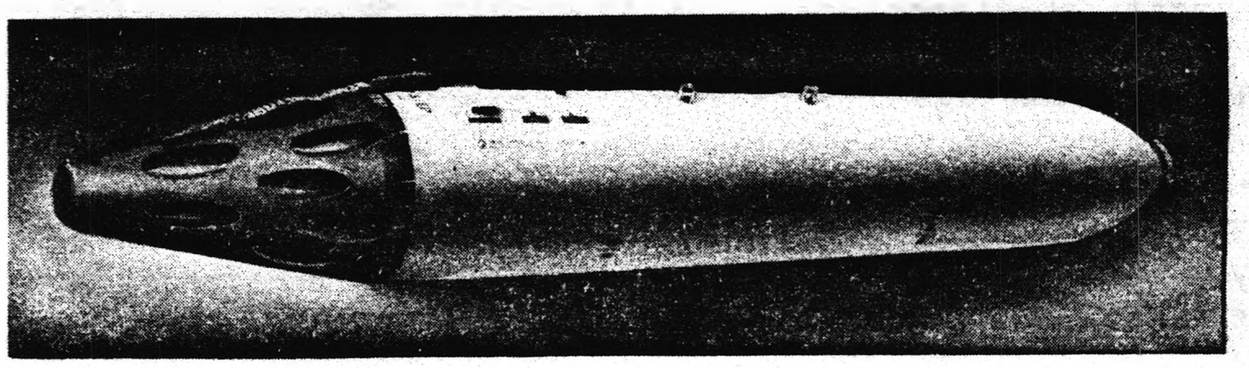

DISPENSER SUU-10A/A

PRACTICE BOMB
BDU-37/B

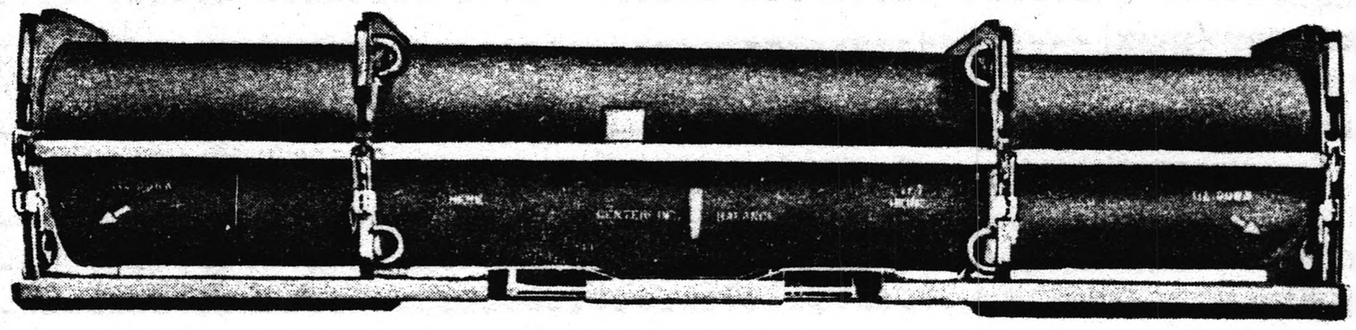

CONTAINER M468

MU-L1897

Federal Item Identification	FSN
DISPENSER AND BOMB, AIRCRAFT: CBU-26/A	1325-962-1789
DISPENSER, BOMB: SUU-10A/A	1325-871-8522
BOMB, PRACTICE: BDU-37/B (9210504) w/long protector	1325-949-0398
BOMB, PRACTICE: BDU-37/B (9221401) w/short protector	1325-891-4542
SHIPPING AND STORAGE CONTAINER, BOMB DISPENSER: M468	8140-446-5366

GENERAL

The CBU-26/A is designed to be mounted on Air Force aircraft F-100 anf F-105 and Navy aircraft F4. It is a practice munition used to simulate the CBU-3A/A. The dispenser contains 19 thin-walled, anodized aluminum tubes that are loaded with 352 practice bombs BDU-37/B. The dispenser is designed to release simultaneously all 19 tubeloads of bombs with a single application of the pilot's firing button.

The practice bomb BDU-37/B is a small, parachute-armed-and-stabilized practice bomb used to simulate the BLU-7A/B.

The CBU munition is stored and transported in the cylindrical steel shipping and storage container M468. An inspection port cover is located in the rear end for monitoring the humidity indicator in the tail cone protector.

CHARACTERISTICS

Bomb dispenser SUU-10A/A:	
Length	118.42 in.
Diameter (max)	15.6 in.
Distance between suspension lugs	14 in.
Weight (approx):	
Empty	138 lbs
Loaded, ready for aircraft attachment	653 lbs
Loaded, ready for packing in container	691 lbs
Center of gravity (measured for nose) (w/o nose cone plug and tail cone protector):	
Empty	55.1 in.
Loaded	60.4 in.
Practice bomb BDU-37/B:	
Length	8.28 in.
Diameter (max)	2.75 in.
Weight	1.40 lbs
Number of bombs in dispenser	352
Bomb dispenser shipping and storage container M468:	
Length	136 in.
Width	31 in.
Height	29 in.
Weight:	
Empty	550 lbs
With loaded dispenser	1,251 lbs
Cube	70.75 cu ft
Center of gravity from front end	66.1 in.
Logistics:	
Quantity-distance class	1
Storage compatibility group	B, E, or N
DOT shipping class	Exempt
DOT shipping designation	Ammunition non-explosive
Aircraft speed range	350-550 knots

REFERENCES: TM 9-1325-202-50/1/TO 1101-5-1-7

DISPENSER AND BOMB, AIRCRAFT: CBU-29A/B

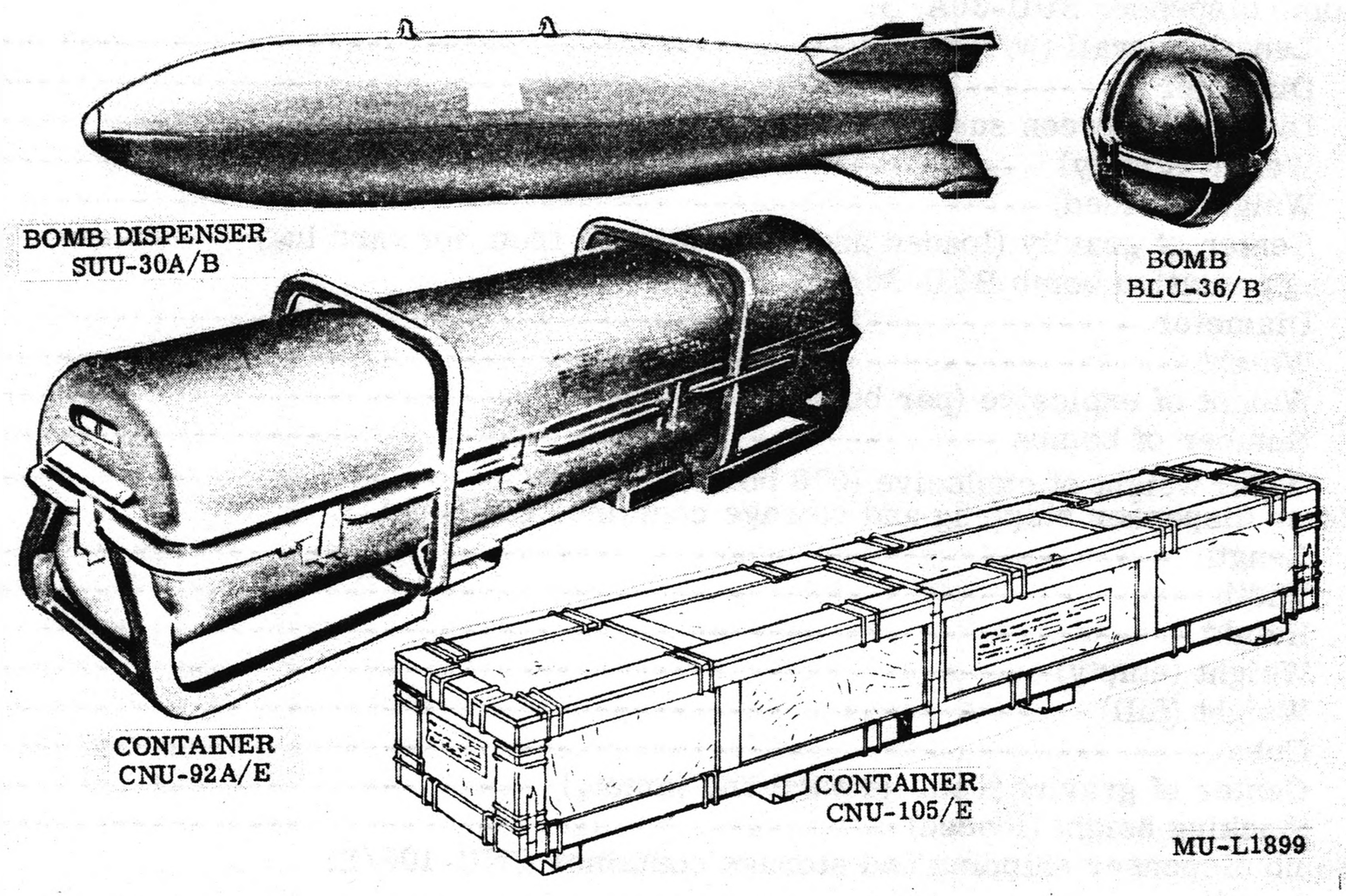

Federal Item Identification	FSN
DISPENSER AND BOMB, AIRCRAFT: CBU-29A/B (in CNU-92A/E)	1325-832-5230
DISPENSER AND BOMB, AIRCRAFT: CBU-29A/B (in CNU-105/E)	1325-935-2021
DISPENSER, BOMB: SUU-30A/B	1325-832-5231
BOMB, FRAGMENTATION: BLU-36/B	1325-933-4957
SHIPPING AND STORAGE CONTAINER, BOMB DISPENSER: CNU-92A/E	8140-832-5232
SHIPPING AND STORAGE CONTAINER, BOMB DISPENSER: CNU-105/E	8140ND000113G

GENERAL

The CBU-29A/B is an aircraft-launched, free-fall, unguided, cluster bomb intended for tactical use against such targets as light materiel and personnel. It is designed for use on aircraft equipped with standard 14-inch spaced rack pylons. The major components of the CBU-29A/B are: the dispenser SUU-30A/B, the bomb BLU-36/B, and the mechanical time fuze M907E1 or M907E2. The dispenser is loaded with 670 bombs BLU-36/B.

The bomb BLU-36/B is a spin-armed, self-dispersing, fragmenting submunition that detonates at the end of a variable delay. The dispenser is divided longitudinally. The two halves are locked together by a nose locking cap forward and a plate at the aft end. Upon release, the arming wire is withdrawn, initiating the fuze time-delay cycle. When the fuze functions, the dispenser opens longitudinally, releasing the payload. When the time-delay bomb fuzes function, the bombs BLU-36/B explode, producing a large number of small, high-velocity fragments.

The CBU-29A/B is stored and transported in the steel shipping and storage container CNU-92A/E or in the wooden shipping and storage container CNU-105/E. The CNU-105/E has been pressure treated with preservative to withstand storage under adverse climatic conditions.

CHARACTERISTICS

Bomb dispenser SUU-30A/B:	
Length overall (w/fuze)	93.00 in.
Diameter	16.00 in.
Distance between suspension lugs	14.00 in.
Weight (empty)	190.00 lb
Weight (loaded)	825.00 lb
Center of gravity (loaded and measured aft from forward lug)	6.00 in.
Fragmentation bomb BLU-36/B:	
Diameter	2.78 in.
Weight	0.95 lb
Weight of explosive (per bomb)	0.183 lb
Number of bombs	670
Total weight of explosive (670 bombs) approx	122 lb
Bomb dispenser shipping and storage container CNU-92A/E:	
Length	95.13 in.
Width	23.13 in.
Height	24.94 in.
Weight (empty)	340.00 lb
Weight (full)	1,165.00 lb
Cube	32.00 cu ft
Center of gravity from forward end (empty)	48.5 in.
Stacking height (loaded)	5 containers
Bomb dispenser shipping and storage container CNU-105/E:	
Length	94.13 in.
Width	22.25 in.
Height	25.88 in.
Weight (empty)	160.00 lb
Weight (full)	985.00 lb
Cube	32.00 cu ft
Center of gravity from forward end (empty)	41.00 in.
Stacking height (loaded)	4 containers
Logistics:	
Quantity-distance class	7
Storage compatibility group	G
DOT shipping class	A
DOT shipping designation	Explosive bomb
Coast Guard classification	VII
Aircraft speed range	400-550 knots
Bomb pattern dimensions	Variable

REFERENCES: TO 11A1-5-18-7
NAVAIR 11-5A-1

DISPENSER AND BOMB, AIRCRAFT: CBU-29/B

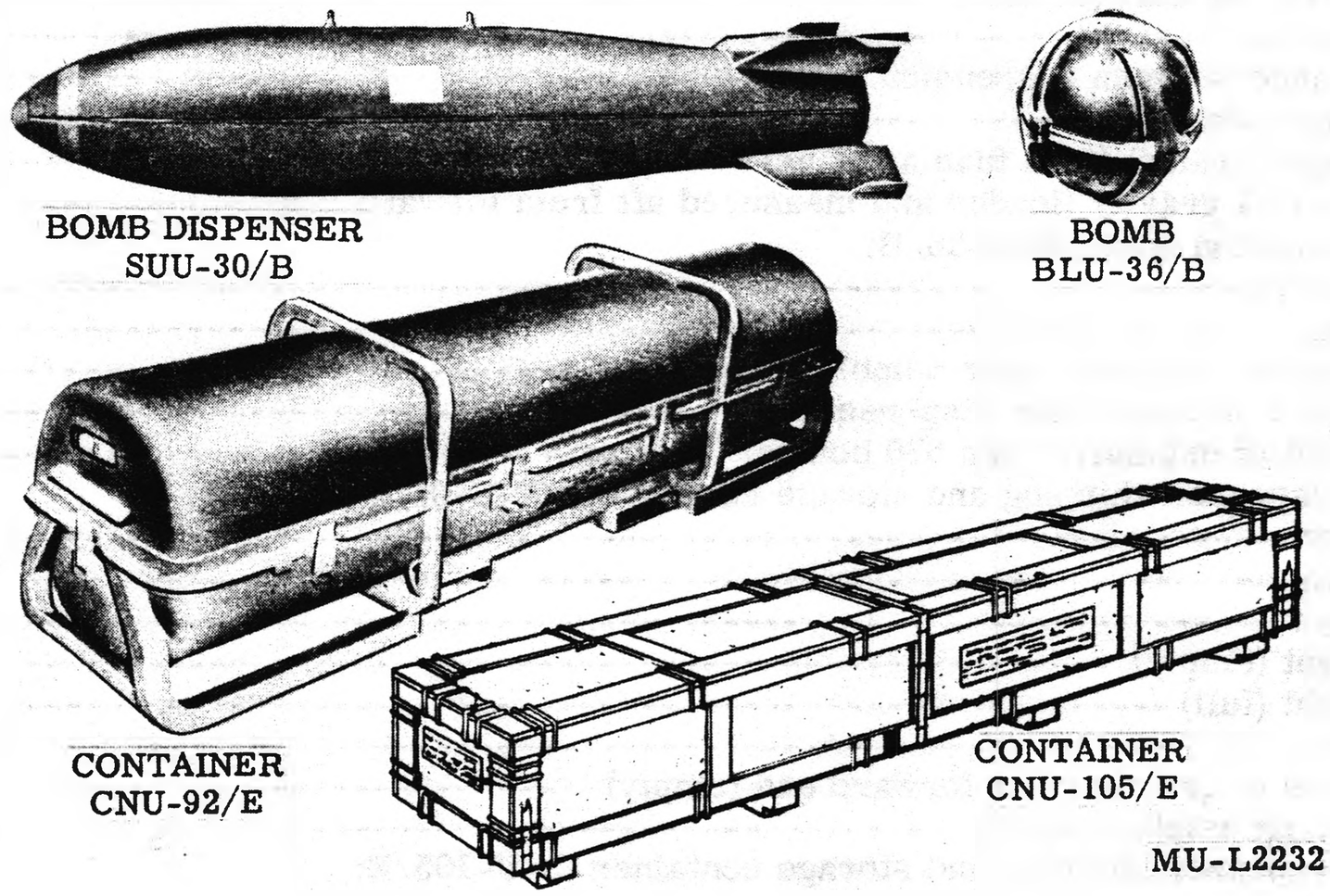

Federal Item Identification	FSN
DISPENSER AND BOMB, AIRCRAFT: CBU-29/B (in CNU-92A/E container)	1325-933-4955
DISPENSER AND BOMB, AIRCRAFT: CBU-29/B (in CNU-92/E container)	1325-933-4955
DISPENSER AND BOMB, AIRCRAFT: CBU-29/B (in CNU-105/E container)	1325-935-6023
DISPENSER, BOMB: SUU-30/B	1325-ND00031G
BOMB, FRAGMENTATION: BLU-36/B	1325-933-4957
SHIPPING AND STORAGE CONTAINER, BOMB DISPENSER: CNU-92A/E	8140-832-5232
SHIPPING AND STORAGE CONTAINER, BOMB DISPENSER: CNU-92/E	8140-854-0888
SHIPPING AND STORAGE CONTAINER, BOMB DISPENSER: CNU-105/E	8140-ND000113G

GENERAL

The CBU-29/B is an aircraft-launched, free-fall, unguided, cluster bomb intended for tactical use against such targets as light materiel and personnel. It is designed for use on aircraft equipped with standard 14-inch spaced bomb rack pylons. The major components of the CBU-29/B are: the dispenser SUU-30/B, the bomb BLU-36/B, and the mechanical time fuze M907E1 or M907E2. The dispenser is loaded with 670 bombs BLU-36/B.

The bomb BLU-36/B is a spin-armed, self-dispersing, fragmenting submunition that detonates at the end of a variable delay. The dispenser is divided longitudinally. The two halves are locked together by a nose locking cap forward and a plate at the aft end. The dispenser has tail fins which impart spin to the dispenser when it is released from the aircraft. Upon release, the arming wire is withdrawn, initiating the fuze time-delay cycle (anywhere from 4 seconds to 92 seconds). When the fuze functions, the dispenser opens longitudinally, releasing the payload. When the time-delay bomb fuzes function, the bombs BLU-36/B explode, producing a large number of small, high-velocity fragments.

The CBU-29/B is stored and transported in the steel shipping and storage container CNU-92/E, A/E, or the wooden shipping and storage container CNU-105/E. The CNU-105/E has been pressure treated with preservative to withstand storage under adverse climatic conditions.

CHARACTERISTICS

Bomb dispenser SUU-30/B:	
Length, overall (w/fuze)	92.60 in.
Diameter	16.00 in.
Distance between suspension lugs	14.00 in.
Weight (empty)	190.00 lb
Weight (loaded) (with fuze and fins)	820.00 lb
Center of gravity (loaded and measured aft from forward lug)	6.00 in.
Fragmentation bomb BLU-36/B:	
Diameter	2.78 in.
Weight	0.95 lb
Weight of explosive (per bomb)	0.183 lb
Number of bombs per dispenser	670
Weight of explosive (per 670 bombs) (approx)	122 lb
Bomb dispenser shipping and storage containers CNU-92/E and A/E:	
Length	95.13 in.
Width	23.13 in.
Height	24.94 in.
Weight (empty)	340.00 lb
Weight (full)	1,160.00 lb
Cube	32.00 cu ft (approx)
Center of gravity from forward end (empty)	48.5 in.
Stacking height (loaded)	5 containers
Bomb dispenser shipping and storage container CNU-105/E:	
Length	94.13 in.
Width	22.25 in.
Height	25.88 in.
Weight (empty)	160.00 lb
Weight (full)	980.00 lb
Cube	32.00 cu ft
Center of gravity from forward end (empty)	41.00 in.
Stacking height (loaded)	4 containers
Logistics:	
Quantity-distance class	7
Storage compatibility group	G
DOT shipping class	A
DOT shipping designation	Explosive bomb
Aircraft speed range	VII
Bomb pattern dimensions	400-550 knots Variable

REFERENCES: TO 11A1-5-18-7

DISPENSER AND BOMB, AIRCRAFT: CBU-29/B (MOD)

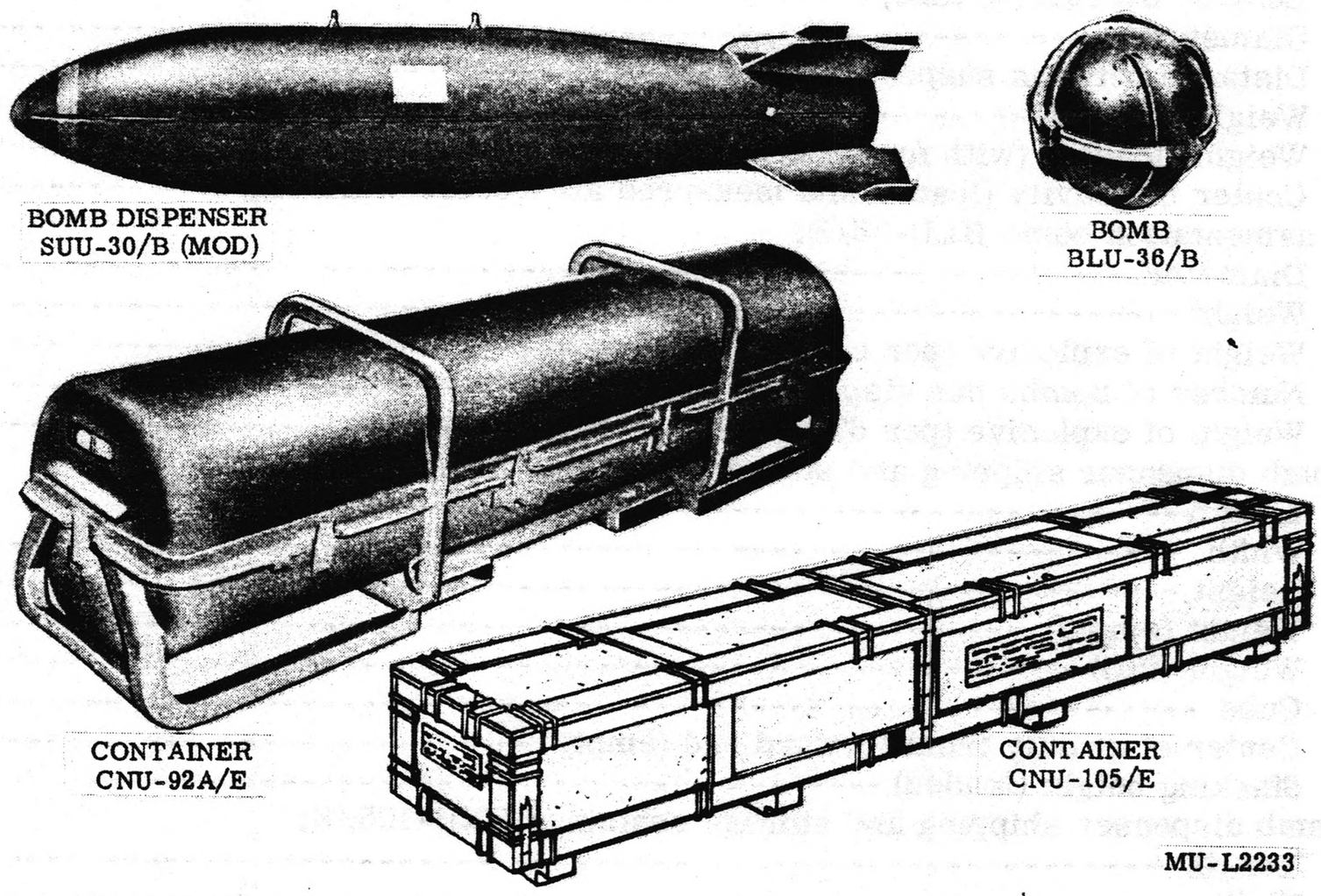

Federal Item Identification	FSN
DISPENSER AND BOMB, AIRCRAFT: CBU-29/B (MOD) (in CNU-92A/E container)	1325-933-4955
DISPENSER AND BOMB, AIRCRAFT: CBU-29/B (MOD) (in CNU-105/E container)	1325-935-6023
DISPENSER, BOMB: SUU-30/B (MOD)	1325-ND-000031G
BOMB, FRAGMENTATION: BLU-36/B	1325-933-4957
SHIPPING AND STORAGE CONTAINER, BOMB DISPENSER: CNU-92A/E	8140-832-5232
SHIPPING AND STORAGE CONTAINER, BOMB DISPENSER: CNU-105/E	8140-ND-000113G

GENERAL

The CBU-29/B (Mod) is an aircraft-launched, free-fall, unguided, cluster bomb intended for tactical use against such targets as light materiel and personnel. It is designed for use on aircraft equipped with standard 14-inch spaced bomb rack pylons. The major components of the CBU-29/B (Mod) are: The dispenser SUU-30/B (Mod), the bomb BLU-36/B, and the mechanical time fuze M907E1 or M907E2. The dispenser is loaded with 670 bombs BLU-36/B.

The bomb BLU-36/B is a spin-armed, self-dispersing, fragmenting submunition that detonates at the end of a variable delay. The dispenser is divided longitudinally. The two halves are locked together by a nose locking cap forward and a plate at the aft end. Upon release, the arming wire is withdrawn, initiating the fuze time-delay cycle (anywhere from 4 seconds to 92 seconds). When the fuze functions, the dispenser opens longitudinally, releasing the payload. When the time-delay bomb fuzes function, the bombs BLU-36/B explode, producing a large number of small, high-velocity fragments.

The CBU-29/B (Mod) is stored and transported in the steel shipping and storage container CNU-92A/E, or the wooden shipping and storage container CNU-105/E. The CNU-105/E has been pressure-treated with preservative to withstand storage under adverse climatic conditions.

CHARACTERISTICS

Bomb dispenser SUU-30/B (MOD):	
Length, overall (w/fuze)	92.60 in.
Diameter	16.00 in.
Distance between suspension lugs	14.00 in.
Weight (empty)	190.00 lb
Weight (loaded) (with fuze and fins)	820.00 lb
Center of gravity (loaded and measured aft from forward lug)	6.00 in.
Fragmentation bomb BLU-36/B:	
Diameter	2.78 in.
Weight	0.95 lb
Weight of explosive (per bomb)	0.183 lb
Number of bombs per dispenser	670
Weight of explosive (per 670 bombs) (approx)	122 lbs
Bomb dispenser shipping and storage container CNU-92A/E:	
Length	95.13 in.
Width	23.13 in.
Height	24.94 in.
Weight (empty)	340.00 lb
Weight (full)	1,160.00 lb
Cube	32.00 cu ft (approx)
Center of gravity from forward end (empty)	48.5 in.
Stacking height (loaded)	5 containers
Bomb dispenser shipping and storage container CNU-105/E:	
Length	94.13
Width	22.25 in.
Height	25.88 in.
Weight (empty)	160.00 lb
Weight (full)	980.00 lb
Cube	32.00 cu ft
Center of gravity from forward end (empty)	41.00 in.
Stacking height (loaded)	4 containers
Logistics:	
Quantity-distance class	7
Storage compatibility group	G
DOT shipping class	A
DOT shipping designation	Explosive bomb
Aircraft speed range	VII
Bomb pattern dimensions	400-550 knots Variable

REFERENCES: TO 11A1-5-18-7
NAVAIR 11-5A-1

DISPENSER AND BOMB, AIRCRAFT: CBU-29B/B

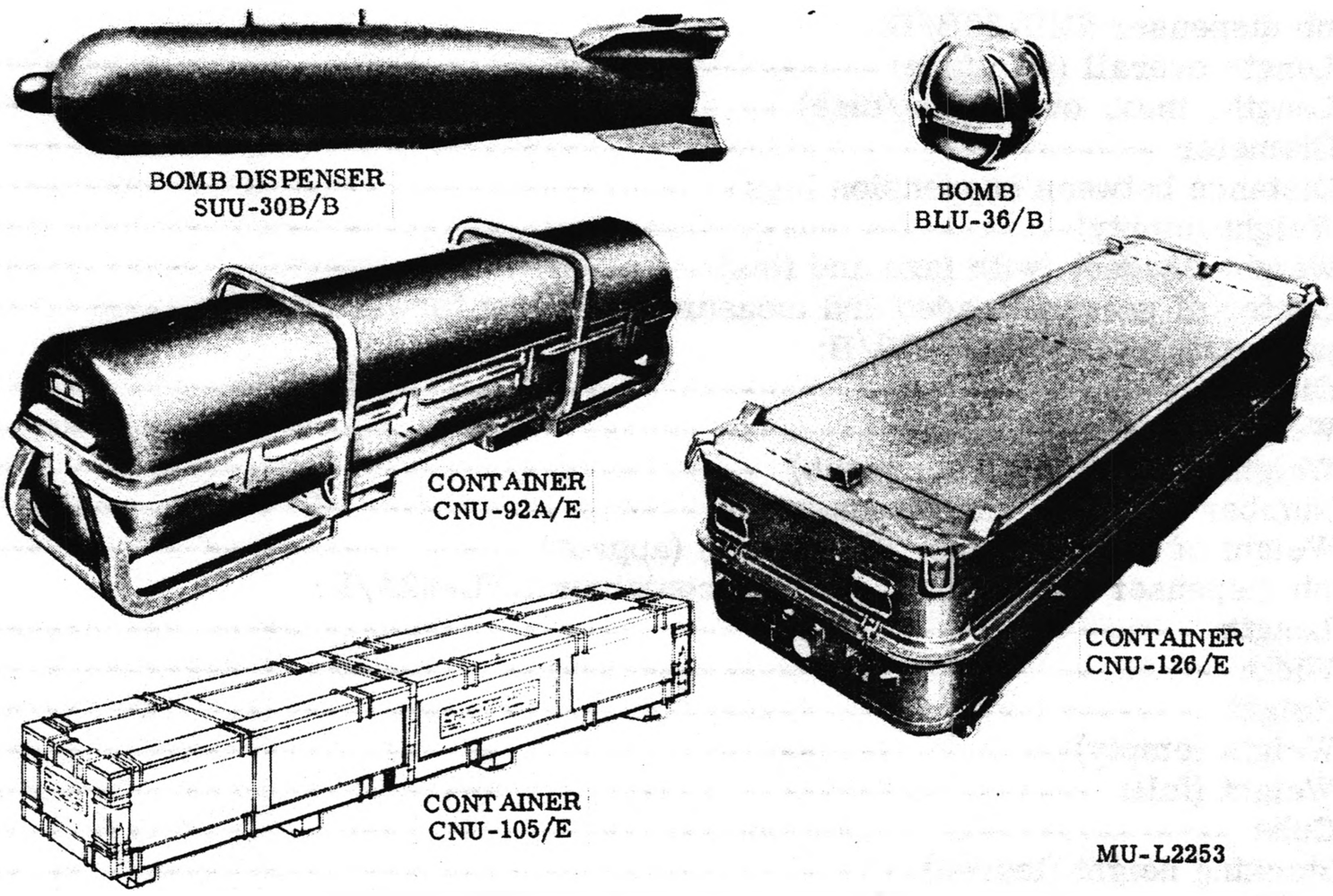

Federal Item Identification

DISPENSER AND BOMB, AIRCRAFT: CBU-29B/B (in CNU-92A/E)----------1325-087-6424
DISPENSER AND BOMB, AIRCRAFT: CBU-29B/B (in CNU-105/E)----------1325-935-2032
DISPENSER AND BOMB, AIRCRAFT: CBU-29B/B (in CNU-126/E)----------1325-143-7091
DISPENSER, BOMB: SUU-30B/B ----------1325-087-6426
BOMB, FRAGMENTATION: BLU-36/B----------1325-933-4957
SHIPPING AND STORAGE CONTAINER, BOMB DISPENSER: CNU-92A/E -----8140-832-5232
SHIPPING AND STORAGE CONTAINER, BOMB DISPENSER: CNU-105/E -----8140ND000113G
SHIPPING AND STORAGE CONTAINER, BOMB DISPENSER: CNU-126/E -----8140NC130580GAQ

GENERAL

The CBU-29B/B is an aircraft-launched, free-fall, unguided, cluster bomb intended for tactical use against such targets as light materiel and personnel. It is designed for use on aircraft equipped with standard 14-inch spaced rack pylons. The major components of the CBU-29B/B are: the dispenser SUU-30B/B, the bomb BLU-36/B, and the mechanical time fuze M907E1, or M907E2, or electrical fuze FMU-26A/B, or FMU-56/B. The dispenser is loaded with 670 bombs BLU-36/B.

The bomb BLU-36/B is a spin-armed, self-dispersing, fragmenting submunition that detonates at the end of a variable delay. The dispenser is divided longitudinally. The two halves are locked together by a nose locking cap forward and a plate at the aft end. Upon release, the delay cycle of the nose fuze is initiated. When the fuze functions, the dispenser opens longitudinally, releasing the payload. When the time-delay bomb fuzes function, the bombs BLU-36/B explode, producing a large number of small, high-velocity fragments.

One each CBU-29B/B are stored and transported in the steel shipping and storage container CNU-92A/E and the wooden shipping and storage container CNU-105/E. Two each CBU-29B/B are stored and transported in the steel CNU-126/E container.

CHARACTERISTICS

Bomb dispenser SUU-30B/B:	
Length overall (w/o fuze)	85.49 in.
Length, max. overall (w/fuze)	93.00 in.
Diameter	16.00 in.
Distance between suspension lugs	14.00 in.
Weight (empty)	200.00 lb
Weight (loaded) (with fuze and fins)	830.00 lb
Center of gravity (loaded and measured aft from forward end)	6.00 lb
Fragmentation bomb BLU-36/B:	
Diameter	2.78 in.
Weight	0.95 lb
Weight of explosive (per bomb)	0.183 lb
Number of bombs per dispenser	670
Weight of explosive (per 670 bombs) (approx)	122 lb
Bomb dispenser shipping and storage container CNU-92A/E:	
Length	95.13 in.
Width	23.13 in.
Height	24.94 in.
Weight (empty)	340.00 lb
Weight (full)	1170.00 lb
Cube	32.00 cu ft
Stacking height (loaded)	5 containers
Bomb dispenser shipping and storage container CNU-105/E:	
Length	94.13 in.
Width	22.25 in.
Height	25.88 in.
Weight (empty)	160.00 lb
Weight (full)	990.00 lb
Cube	32.00 cu ft
Stacking height (loaded)	4 containers
Bomb dispenser shipping and storage container CNU-126/E:	
Length	97
Width	37
Height	24
Weight (empty)	500 lb
Weight (full)	2160 lb
Cube	49.8 cu ft
Stacking height (loaded)	5 containers
Logistics:	
Quantity-distance class	7
Storage compatibility group	G
DOT shipping class	A
DOT shipping designation	Explosive bomb
Coast Guard classification	VII
Aircraft speed range	400-550 knots
Bomb pattern dimensions	Variable

REFERENCES: TO 11A1-5-18-7.
NAVAIR 11-5A-1

DISPENSER AND BOMB, AIRCRAFT: CBU-29C/B

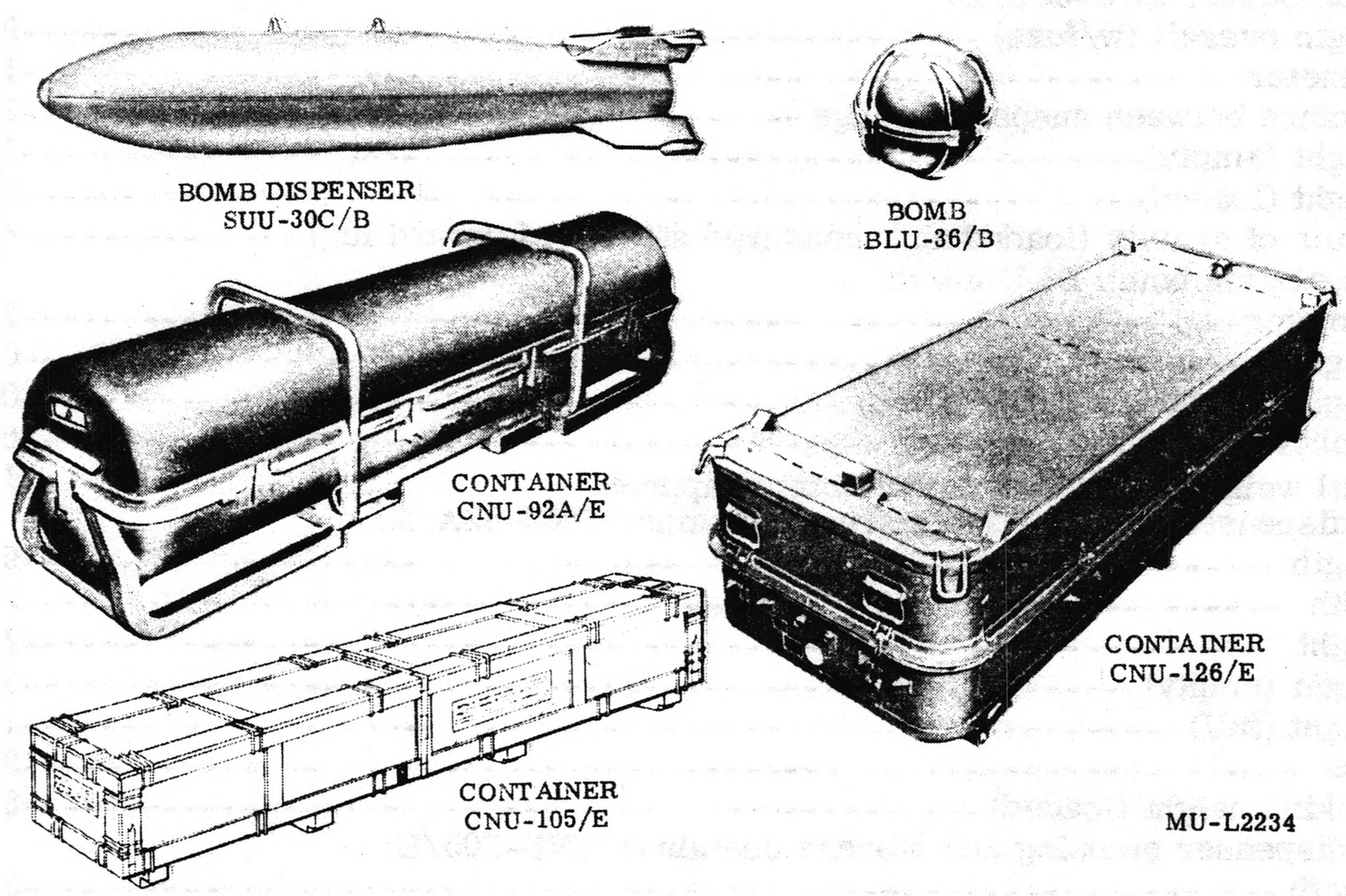

Federal Item Identification	FSN
DISPENSER AND BOMB, AIRCRAFT: CBU-29C/B (in CNU-92A/E)	1325-935-9198
DISPENSER AND BOMB, AIRCRAFT: CBU-29C/B (in CNU-105/E)	1325-809-1482
DISPENSER AND BOMB, AIRCRAFT: CBU-29C/B (in CNU-126/E)	1325-143-7089
DISPENSER, BOMB: SUU-30C/B	1325-809-1486
BOMB, FRAGMENTATION: BLU-36/B	1325-933-4957
SHIPPING AND STORAGE CONTAINER, BOMB DISPENSER: CNU-92A/E	8140-832-5232
SHIPPING AND STORAGE CONTAINER, BOMB DISPENSER: CNU-105/E	8140-ND000113G
SHIPPING AND STORAGE CONTAINER, BOMB DISPENSER: CNU-126/E	8140-NC130580GAQ

GENERAL

The CBU-29C/B is an aircraft-launched, free-fall, unguided, cluster bomb intended for tactical use against such targets as light materiel and personnel. It is designed for use on aircraft equipped with standard 14-inch spaced rack pylons. The major components of the CBU-29C/B are: the dispenser SUU-30C/B, the bomb BLU-36/B, and the mechanical time fuze M907E1 or M907E2. The dispenser is loaded with 640 bombs BLU-36/B.

The bomb BLU-36/B is a spin-armed, self-dispersing, fragmenting submunition that detonates at the end of a variable delay. The dispenser is divided longitudinally. The two halves are locked together by a nose locking cap forward and a plate at the aft end. Upon release, the arming wire is withdrawn, initiating the fuze time-delay cycle. When the fuze functions, the dispenser opens longitudinally, releasing the payload. When the time-delay bomb fuzes function, the bombs BLU-36/B explode, producing a large number of small, high-velocity fragments.

One each CBU-29C/B are stored and transported in the steel shipping and storage container CNU-92A/E and the wooden shipping and storage container CNU-105/E. Two each CBU-29C/B are stored and transported in the steel CNU-126/E container.

CHARACTERISTICS

Bomb dispenser SUU-30C/B:	
Length overall (w/fuze)	93.00 in.
Diameter	16.00 in.
Distance between suspension lugs	14.00 in.
Weight (empty)	190.00 lb
Weight (loaded)	825.00 lb
Center of gravity (loaded and measured aft from forward lug)	6.00 in.
Fragmentation bomb BLU-36/B:	
Diameter	2.78 in.
Weight	0.95 lb
Weight of explosive (per bomb)	0.183 lb
Number of bombs	640
Total weight of explosive (640 bombs) approx	117 lb
Bomb dispenser shipping and storage container CNU-92A/E:	
Length	95.13 in.
Width	23.13 in.
Height	24.94 in.
Weight (empty)	340.00 lb
Weight (full)	1,165.00 lb
Cube	32.00 cu ft
Stacking height (loaded)	5 containers
Bomb dispenser shipping and storage container CNU-105/E:	
Length	94.13 in.
Width	22.25 in.
Height	25.88 in.
Weight (empty)	160.00 lb
Weight (full)	985.00 lb
Cube	32.00 cu ft
Stacking height (loaded)	4 containers
Bomb dispenser shipping and storage container CNU-126/E:	
Length	97
Width	37
Height	24
Weight (empty)	500 lb
Weight (full)	2160 lb
Cube	49.8 cu ft
Stacking height (loaded)	5 containers
Logistics:	
Quantity-distance class	7
Storage compatibility group	G
DOT shipping class	A
DOT shipping designation	Explosive bomb
Coast Guard classification	VII
Aircraft speed range	400-550 knots
Bomb pattern dimensions	Variable

REFERENCES: TO 11A1-5-18-7
NAVAIR 11-5A-1

DISPENSER AND MINE, AIRCRAFT: CBU-33/A

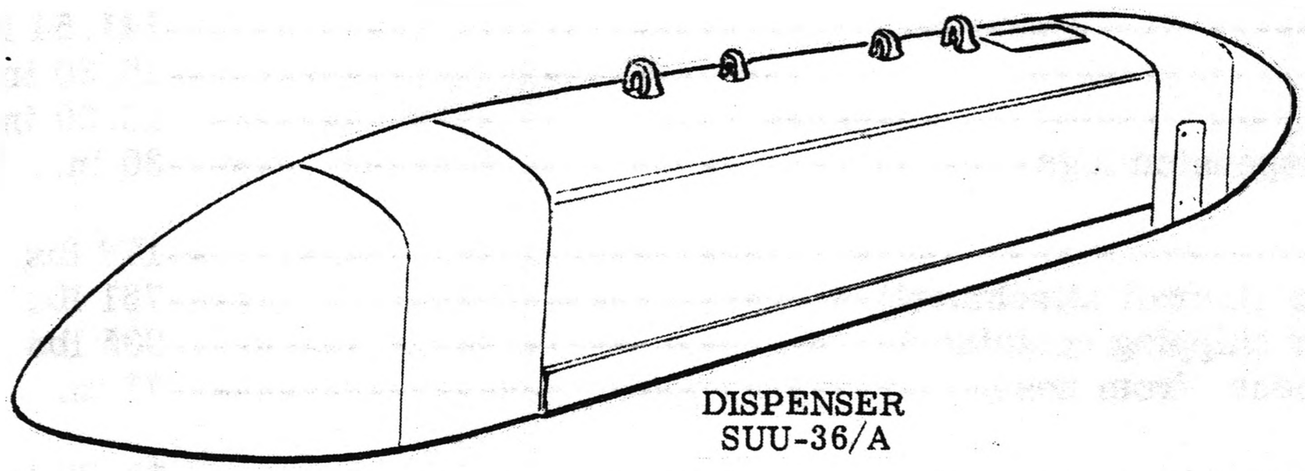

DISPENSER
SUU-36/A

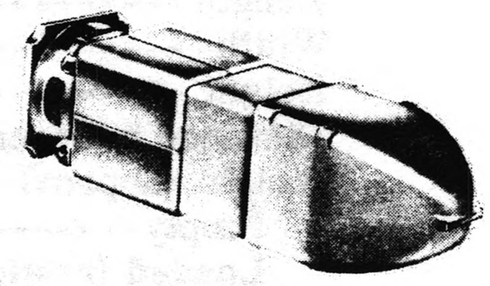

MINE
BLU-45/B

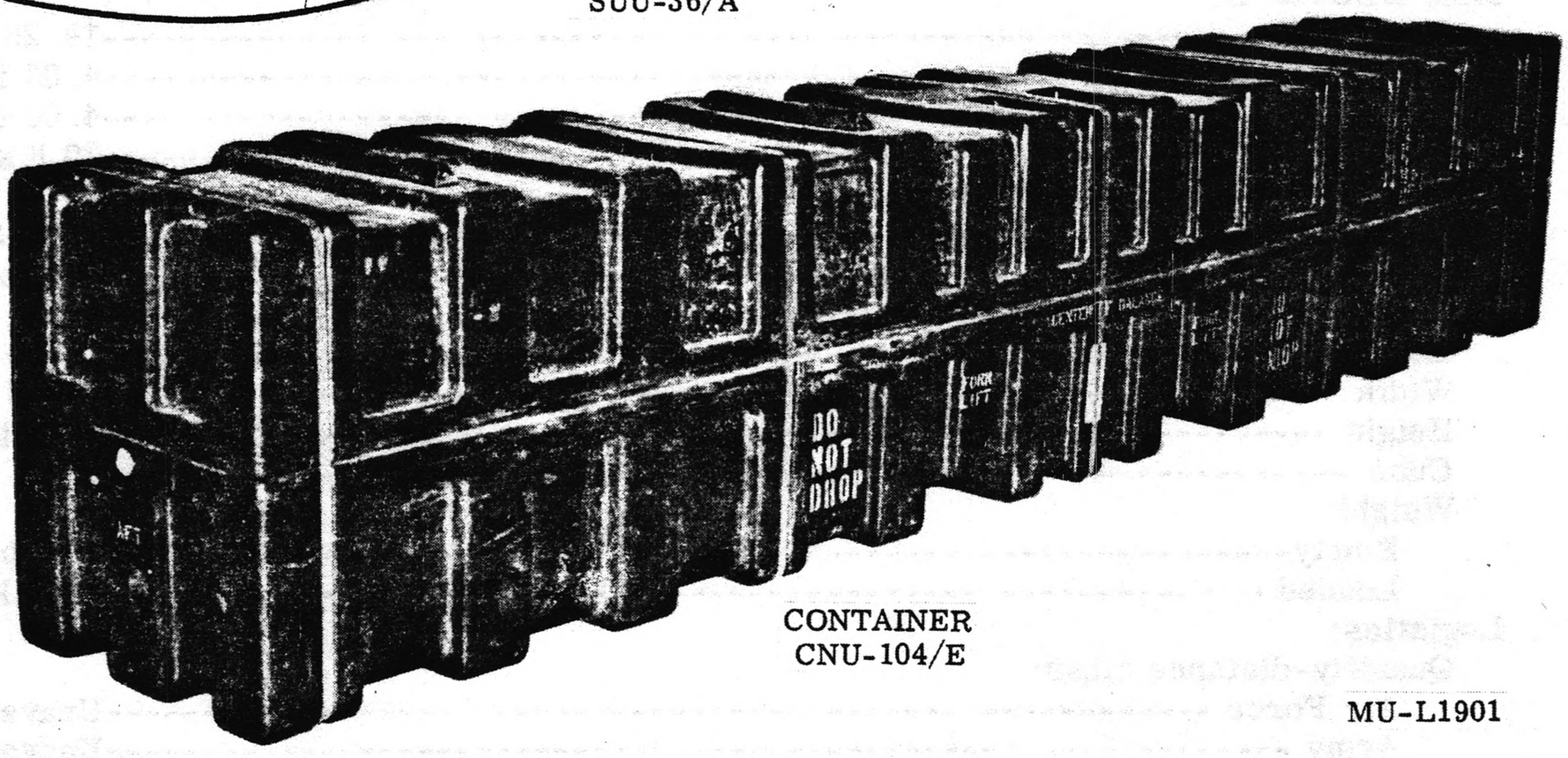

CONTAINER
CNU-104/E

MU-L1901

Federal Item Identification	FSN
DISPENSER AND MINE, AIRCRAFT: CBU-33/A	1345-089-8543
DISPENSER, MINE: SUU-36/A	None
MINE: BLU-45/B	None
SHIPPING AND STORAGE CONTAINER, MINE DISPENSER: CNU-104/E	8140-089-5888

GENERAL

The CBU-33/A consists of a dispenser SUU-36/A loaded with 30 mines BLU-45/B. The dispenser contains 10 bays, each bay holding one rack of three mines. It is designed to be adapted to aircraft B26, F4C, F84, F100, F105, F111, and T28. The dispenser is designed to release one rack at a time with the actuation of an electrical circuit from the cockpit of the aircraft in either a manual or ripple mode.

The mine BLU-45/B is an antimateriel device. The mine is bullet shaped with a heavy-cast steel nose and four umbrella vanes aft, which open when the mine is released. The vanes stabilize the mine in free fall.

The shipping and storage container CNU-104/E is a rotationally molded, high density polyethylene, rectangular box. Each container holds one CBU-33/A For shipping purposes, two containers may be strapped together as a unit.

CHARACTERISTICS

Mine dispenser SUU-36/A:	
Length	141.54 in.
Width	15.30 in.
Height	16.50 in.
Distance between suspension lugs	30 in., 14 in.
Weight (approx):	
Empty	176 lbs
Loaded (ready for aircraft attachment)	761 lbs
Loaded (ready for shipping container)	905 lbs
Center of gravity (meas. from nose)	71 in.
Mine BLU-45/B:	
Length	14.25 in.
Width	4.00 in.
Height	4.00 in.
Weight (approx)	20 lbs
No. of mines in dispenser	30
Explosive filler	HTA-3
Total explosive weight (30 mines)	150 lbs
Mine dispenser shipping and storage container CNU-104/E:	
Length	154.5 in.
Width	24.25 in.
Height	30.5 in.
Cube	66 cu ft
Weight:	
Empty	185 lbs
Loaded	1090 lbs
Logistics:	
Quantity-distance class:	
Air Force	Unavailable
Army	Unavailable
Storage compatibility group	Unavailable
DOT shipping class	A
DOT shipping designation	Explosive mine
Coast Guard classification	Unavailable
Aircraft speed range	Up to MACH 1.2

DISPENSER AND MINE, AIRCRAFT: CBU-34/A

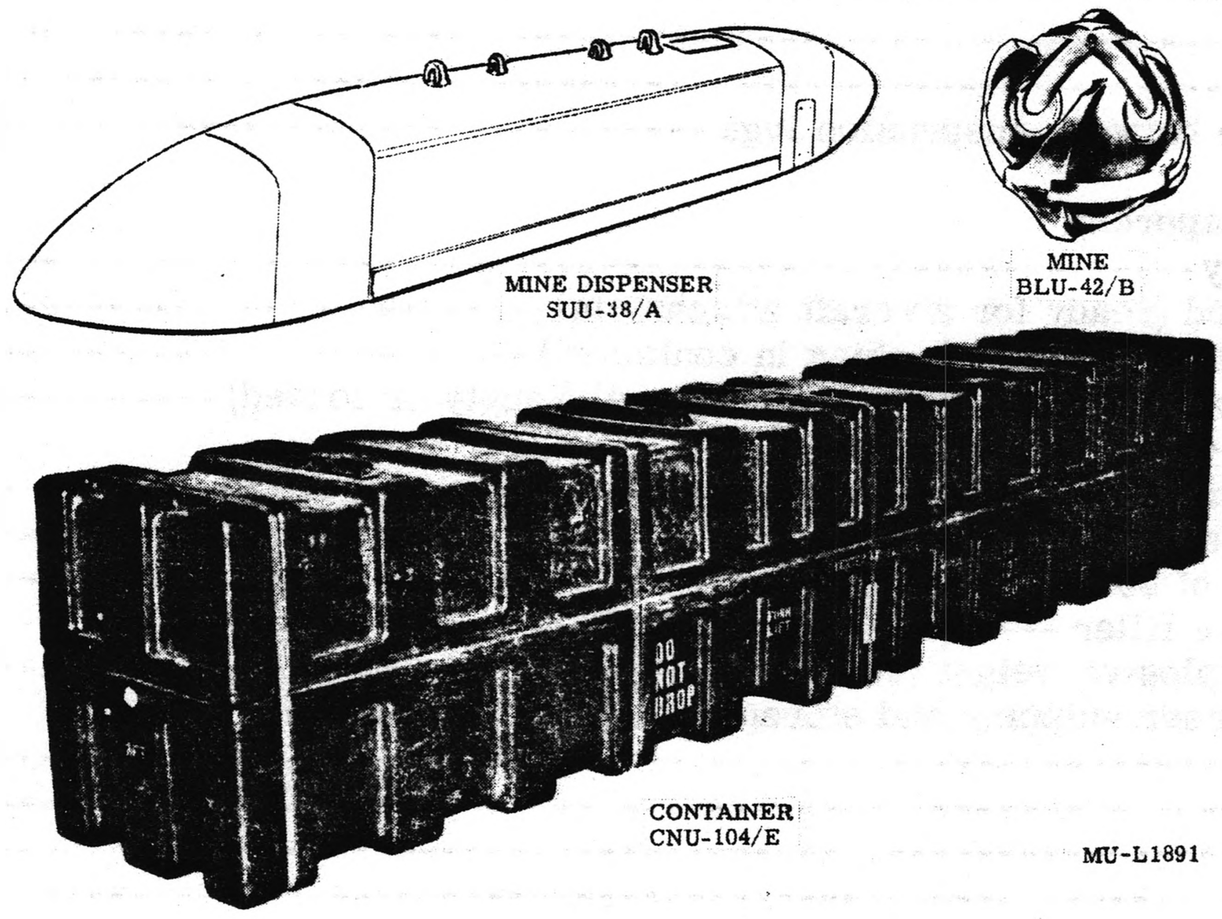

Federal Item Identification	FSN
DISPENSER AND MINE, AIRCRAFT: CBU-34/A	1345-089-8688
DISPENSER, MINE: SUU-38/A	None
MINE: BLU-42/B	None
SHIPPING AND STORAGE CONTAINER, MINE DISPENSER: CNU-104/E	8140-089-5888

GENERAL

The CBU-34/A consists of a dispenser SUU-38/A loaded with 540 mines BLU-42/B. The dispenser contains 10 bays, each bay holding three canisters of mines. Each canister contains 18 mines. It is designed to be adapted to B26, F4C, F84, F100, F105, F111, and T28 aircraft. The dispenser is designed to release one canister at a time with an application of electric current in either a manual or ripple mode.

The mine BLU-42/B is an antipersonnel, fragmentation device. The external appearance is spherical with protruding wind vanes. The body assembly of a BLU-42/B consists of a sintered iron shell with cross tabs on each side. The fuze assembly is an electro-mechanical firing device. When the BLU-42/B is ejected from the canister, air-pressure causes spin which, in turn, initiates an electrical circuit within.

The shipping and storage container is a rotationally molded, high-density polyethylene, rectangular box. Each container holds one CBU-34/A. For shipping purposes, two containers may be strapped together as a unit.

CHARACTERISTICS

Mine dispenser SUU-38/A:	
Length	141.5 in.
Width	15.3 in.
Height	16.5 in.
Distance between suspension lugs	30 in. or 14 in., as applicable
Weight (approx):	
Empty	176 lb
Loaded (ready for aircraft attachment)	824 lb
Loaded (ready for packing in container)	970 lb
Center of gravity (measured from nose) (empty or loaded)	71 in.
Mine BLU-42/B:	
Diameter (excluding wind tabs)	2-3/8 in.
Weight (approx)	1 lb
Number of bombs in dispenser	540
Explosive filler	Comp B
Total explosive weight (540 bombs)	88.33 lb
Mine dispenser shipping and storage container CNU-104/E:	
Length	154.4 in.
Width	24.3 in.
Height	30.5 in.
Cube	66 cu ft
Weight:	
Empty	185 lb
Loaded	1155 lb
Logistics:	
Quantity-distance class:	
Air Force	5(M)
Army	7
Storage compatibility group:	
Air Force	G
Army	A
DOT shipping class	A
DOT shipping designation	Explosive Bomb
Coast Guard classification	VII
Aircraft speed range	Up to MACH 1.2

REFERENCES: TO 11A9-11-7

DISPENSER AND MINE, AIRCRAFT: CBU-34A/A

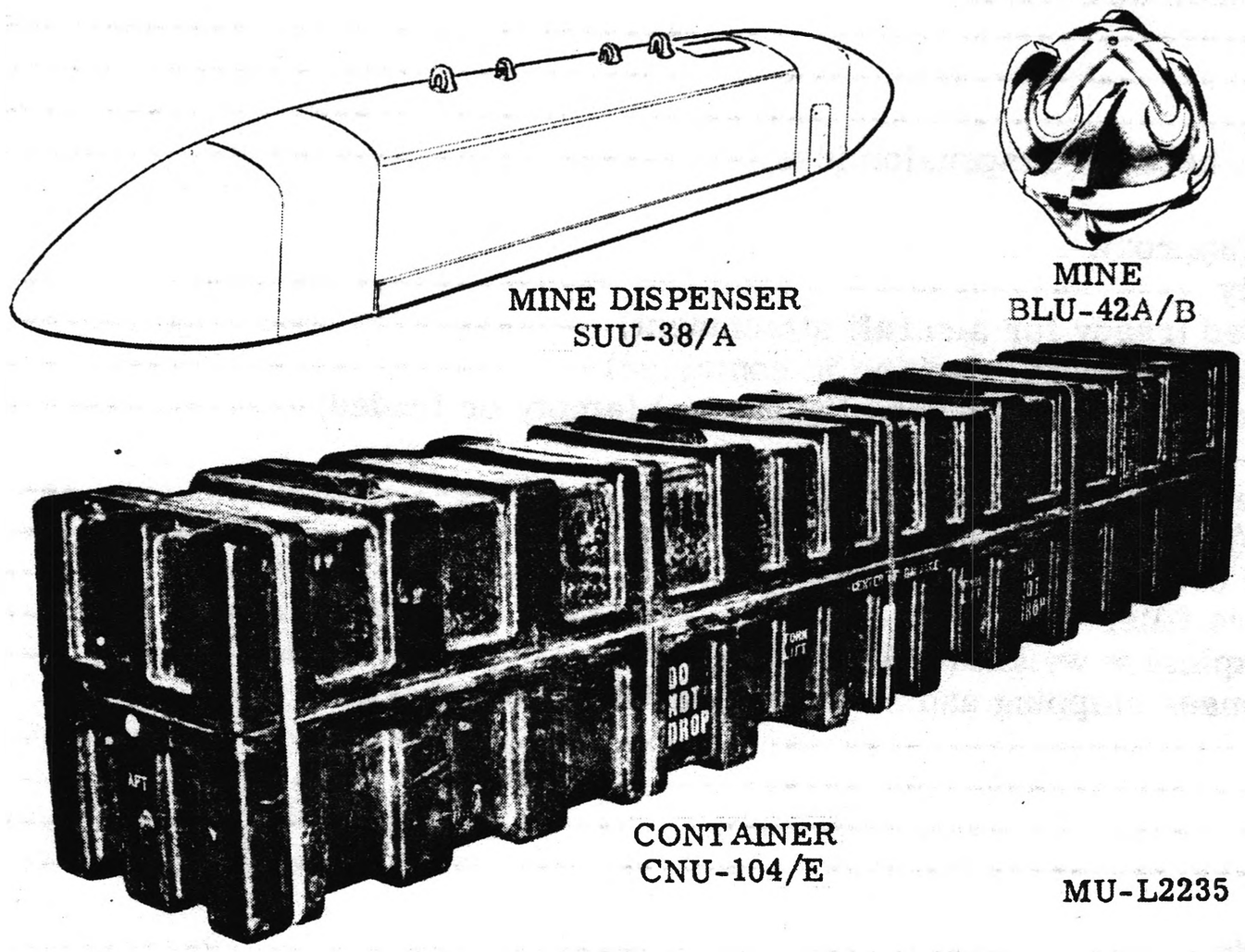

Federal Item Identification	FSN
DISPENSER AND MINE, AIRCRAFT: CBU-34A/A	1345-804-9964
DISPENSER, MINE: SUU-38/A	None
MINE: BLU-42A/B	None
SHIPPING AND STORAGE CONTAINER, MINE DISPENSER: CNU-104/E	8140-089-5888

GENERAL

The CBU-34A/A consists of a dispenser SUU-38/A loaded with 540 mines BLU-42A/B. The dispenser contains 10 bays; each bay holding three canisters of mines. Each canister contains 18 mines. It is designed to be adapted to B26, F4C, F84, F100, F105, F111, and T28 aircraft. The dispenser is designed to release one canister at a time with an application of electric current in either a manual or ripple mode.

The mine BLU-42A/B is an antipersonnel, fragmentation device. The external appearance is spherical with protruding wind vanes. The body assembly of a BLU-42A/B consists of a sintered iron shell with cross tabs on each side. The fuze assembly is an electro-mechanical firing device. When the BLU-42A/B is ejected from the canister, air-pressure causes spin which, in turn, initiates an electrical circuit within.

The shipping and storage container is a rotationally molded, high-density polyethylene, rectangular box. Each container holds one CBU-34A/A. For shipping purposes, two containers may be strapped together as a unit.

CHARACTERISTICS

Mine dispenser SUU-38/A:	
Length	141.5 in.
Width	15.3 in.
Height	16.5 in.
Distance between suspension lugs	30 in. or 14 in., as applicable
Weight (approx):	
Empty	176 lb
Loaded (ready for aircraft attachment)	824 lb
Loaded (ready for packing in container)	970 lb
Center of gravity (measured from nose) (empty or loaded)	71 in.
Mine BLU-42A/B:	
Diameter (excluding wind tabs)	2-3/8 in.
Weight (approx)	1 lb
Number of bombs in dispenser	540
Explosive filler	Comp B
Total explosive weight (540 bombs)	88.33 lb
Mine dispenser shipping and storage container CNU-104/E:	
Length	154.4 in.
Width	24.3 in.
Height	30.5 in.
Cube	66 cu ft
Weight:	
Empty	185 lb
Loaded	1155 lb
Logistics:	
Quantity-distance class:	
Air Force	5(M)
Army	7
Storage compatibility group:	
Air Force	G
Army	A
DOT shipping class	A
DOT shipping designation	Explosive bomb
Coast Guard classification	VII
Aircraft speed range	Up to MACH 1.2

DISPENSER AND BOMB, AIRCRAFT: CBU-38/A

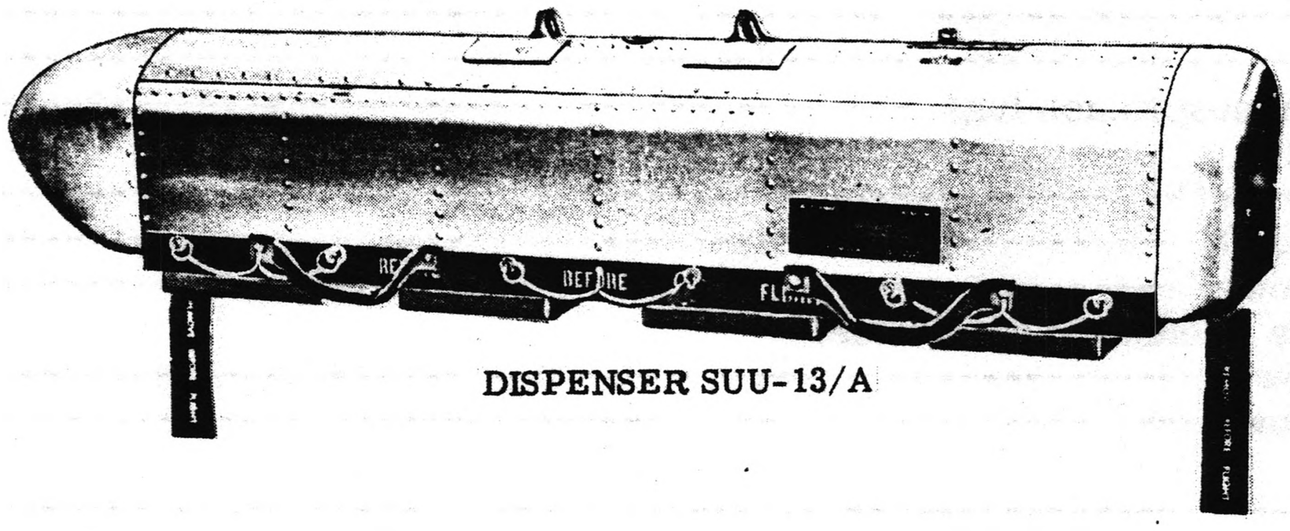

DISPENSER SUU-13/A

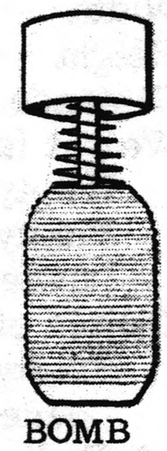

BOMB
BLU-49/B

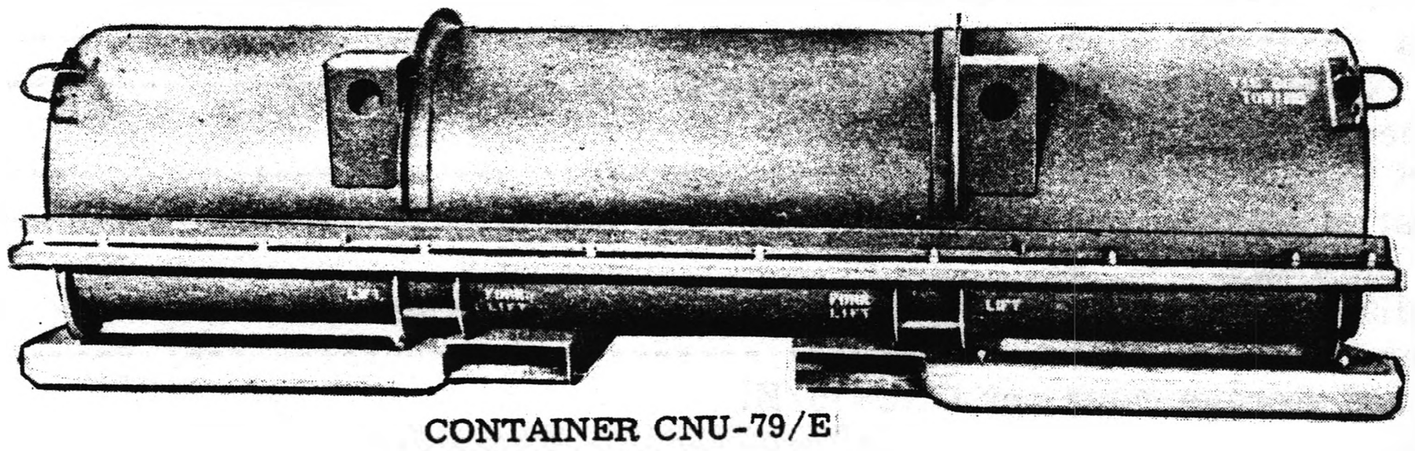

CONTAINER CNU-79/E

MU-L2266

Federal Item Identification	FSN
DISPENSER AND BOMB, AIRCRAFT: CBU-38/A	None
DISPENSER, BOMB: SUU-13/A	1325-788-5305
BOMB, FRAGMENTATION: BLU-49/B	None
SHIPPING AND STORAGE CONTAINER, BOMB DISPENSER: CNU-79/E	8140-867-1130

GENERAL

The CBU-38/A is designed to be mounted on Air Force aircraft F4C, F4D, F4E, F-84, F-86, F-100, F-104, F-105 and F-111A. It is an antimateriel-antipersonnel munition. The dispenser contains 40 vertical aluminum tube assemblies with one bomb BLU-49/B loaded into each tube. The dispenser is designed to release all 40 bombs with a single application of current through an intervalometer. Total release of all bombs is accomplished within a variable time span which is pre-set on the intervalometer before flight.

The bomb BLU-49/B consists of a fragmenting body, fuzing components, telescoping tail-boom, and ring-tail stabilizer. The telescoping tail boom connects the ring-tail stabilizer to the bomb body and facilitates installation of the bomb in the dispenser. When the bomb is ejected from the tube, a conical spring extends the stabilizer and permits the arming sequence to begin. Upon extension of the telescoping boom the stabilizer withdraws a safety pin securing the fuze rotor and arming delay cup. A spring rotates a shaft and initiates arming of the fuze. With the fuze armed, the bomb will explode upon impact.

The CBU munition is stored and transported in the steel shipping and storage container CNU-79/E. The cover assembly is secured to the base assembly by 26 quick-acting T-bolts. The base assembly has four lifting bars mounted on exterior gussets for lifting the loaded container with a sling. The cover assembly has four eyes, two at each end, for tiedown and towing (on early model container only).

CHARACTERISTICS

Bomb dispenser SUU-13/A:	
Length	90.375 in.
Width	14.750 in.
Height	14.438 in.
Distance between suspension lugs	14 in.
Weight (approx):	
Empty (w/o pallet)	117 lb
Empty (w/ pallet)	194 lb
Loaded (as flown)	731 lb
Center of gravity (measured from nose):	
Empty (as flown)	53.79 in.
Loaded (as flown)	51.6 in.
Bomb BLU-49/B:	
Length	10 in.
Diameter	4.6 in.
Weight	13 lb
Total explosive weight (approx) (40 bombs)	183 lb
Bomb tube assembly:	
Weight (loaded) (approx)	15 lb
Number of bombs	1
Ejection cartridge:	
Propellant	1.75 grams (M5)
Primer	1.60 grains
Shipping and storage container CNU-79/E:	
Length:	
Early model	116 in.
Late model	104 in.
Width	31.5 in.
Height	31.5 in.
Weight (approx):	
Empty:	
Early model	800 lb
Late model	675 lb
With loaded dispenser:	
Early model	1614 lb
Late model	1489 lb
Cube:	
Early model	64.6 cu ft
Late model	59.7 cu ft
Center of gravity from front end:	
Early model	58 in.
Late model	56.4 in.
Logistics:	
Quantity-distance class:	
Army	7
Air Force	5 (M)
Storage compatibility group (Army and Air Force)	G
DOT shipping class	A
DOT shipping designation	Explosive bomb(s)

DISPENSER AND MINE, AIRCRAFT: CBU-42/A

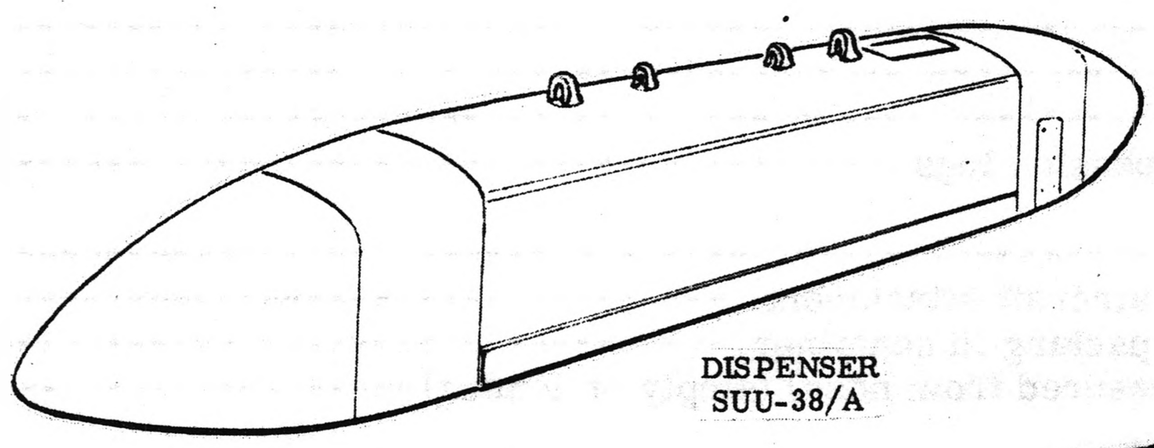

DISPENSER
SUU-38/A

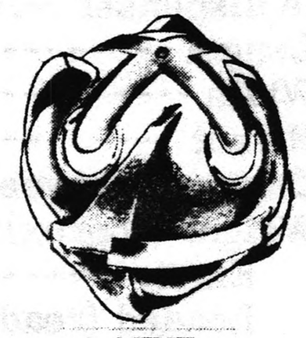

MINE
BLU-54/B

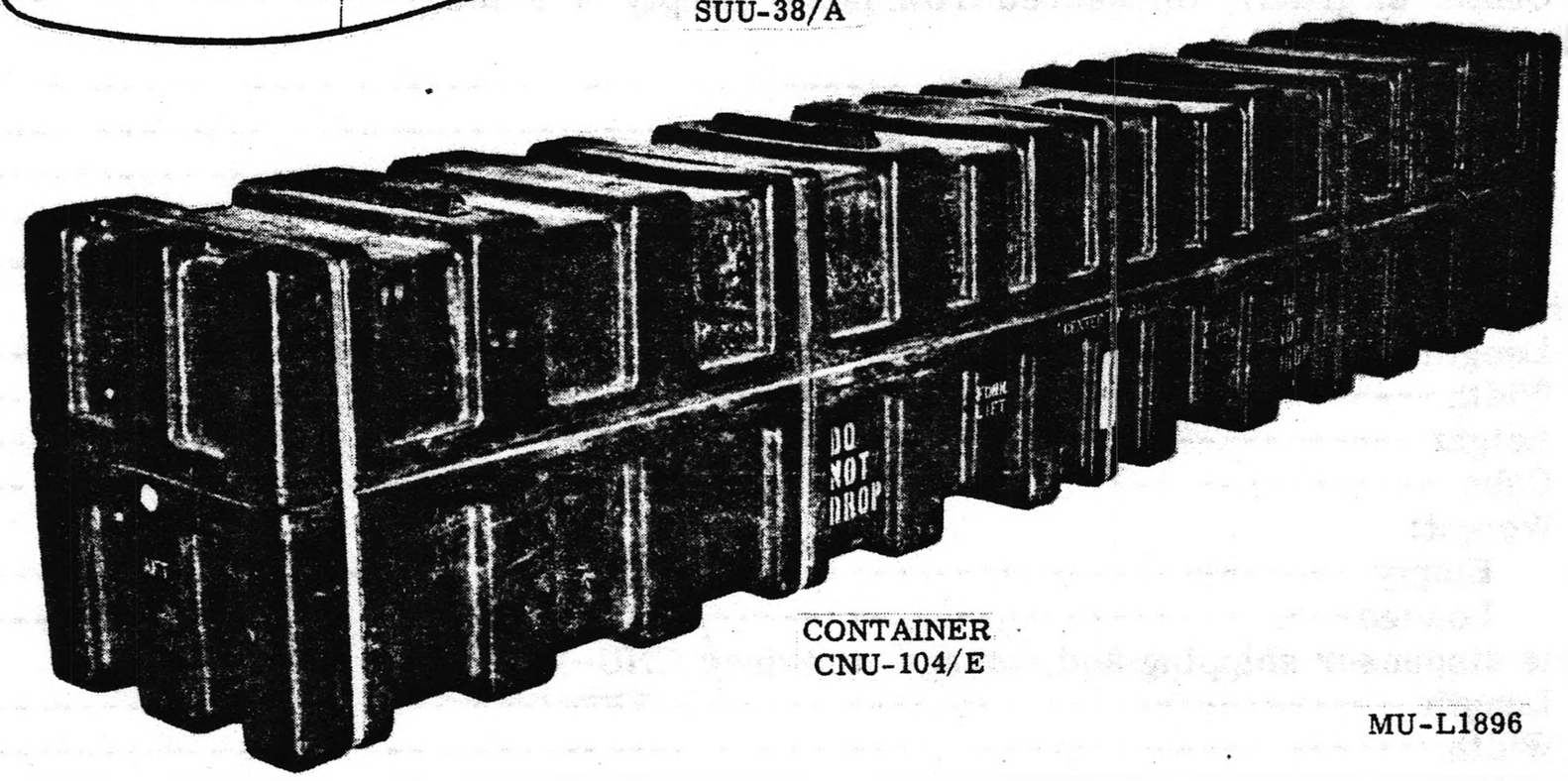

CONTAINER
CNU-104/E

MU-L1896

Federal Item Identification	FSN
DISPENSER AND MINE, AIRCRAFT: CBU-42/A (PACKED IN CNU-123/E CONTAINER)	1345-143-7126
DISPENSER AND MINE, AIRCRAFT: CBU-42/A (PACKED IN CNU-104/E CONTAINER)	1345-805-0024
DISPENSER, MINE: SUU-38/A	None
MINE: BLU-54/B	None
SHIPPING AND STORAGE CONTAINER, MINE DISPENSER: CNU-104/E	8140-089-5888
SHIPPING AND STORAGE CONTAINER, MINE DISPENSER: CNU-123/E	8140-450-8199

GENERAL

The CBU-42/A consists of a dispenser SUU-38/A loaded with 540 mines BLU-54/B. The dispenser contains 10 bays, each holding three canisters of mines. The dispenser is designed to release canisters one at a time, in either the manual or ripple mode, through the application of an electric current.

The mine BLU-54/B is an antipersonnel, fragmentation device. The external appearance is spherical with protruding wind vanes. The body assembly of a BLU-54/B consists of a sintered iron shell with cross tabs on each side. The fuze assembly is an electro-mechanical device. When the BLU-54/B is ejected from the canister, air pressure causes spin which, in turn, initiates an electric circuit within.

The shipping and storage container CNU-104/E is a rotationally molded, high density polyethylene, rectangular box. Each container holds one CBU-42/A. For shipping and storage purposes, two containers may be strapped together. The shipping and storage container CNU-123/E is a rectangular steel container holding one CBU-42/A. It is a sealed container with humidity indicator and pressure relief valve.

CHARACTERISTICS

Mine dispenser SUU-38/A:	
Length	141.5 in.
Width	15.3 in.
Height	16.5 in.
Distance between suspension lugs	14 or 30 in.
Weight (approx):	
Empty	176 lb
Loaded (ready for aircraft attachment)	824 lb
Loaded (ready for packing in container)	970 lb
Center of gravity (measured from nose) (empty or loaded)	71 in.
Mine BLU-54/B:	
Diameter (excluding wind tabs)	2-3/8 in.
Weight (approx)	1 lb
Number of bombs in dispenser	540
Explosive filler	Comp B
Total explosive weight (540 bombs)	88.33 lb
Mine dispenser shipping and storage container CNU-104/E:	
Length	154.5 in.
Width	24.3 in.
Height	30.5 in.
Cube	66.3 cu ft
Weight:	
Empty	185 lb
Loaded	1155 lb
Mine dispenser shipping and storage container CNU-123/E:	
Length	149 in.
Width	22 in.
Height	25 in.
Cube	47.5 cu ft
Weight:	
Empty	365 lb
Loaded	1336 lb
Logistics:	
Quantity-distance class:	
Army	7
Air Force	5(M)
Storage compatibility group:	
Army	A
Air Force	G
DOT shipping class	Explosive A
DOT shipping designation	Explosive mine
Coast Guard classification	VII
Aircraft speed range	Up to Mach 1.2

DISPENSER AND BOMB, AIRCRAFT: CBU-46/A

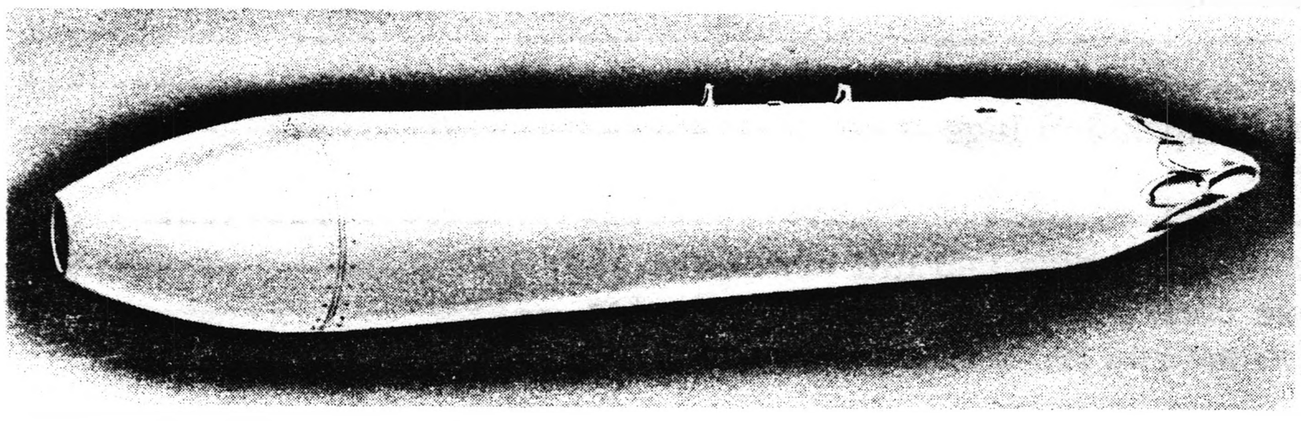

DISPENSER SUU-7C/A

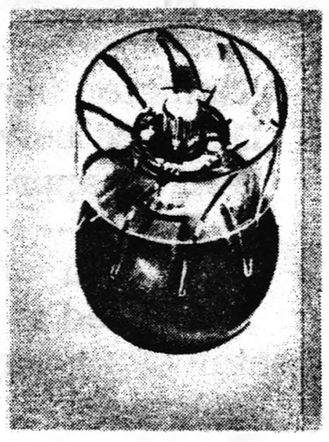

BOMB BLU-66/B

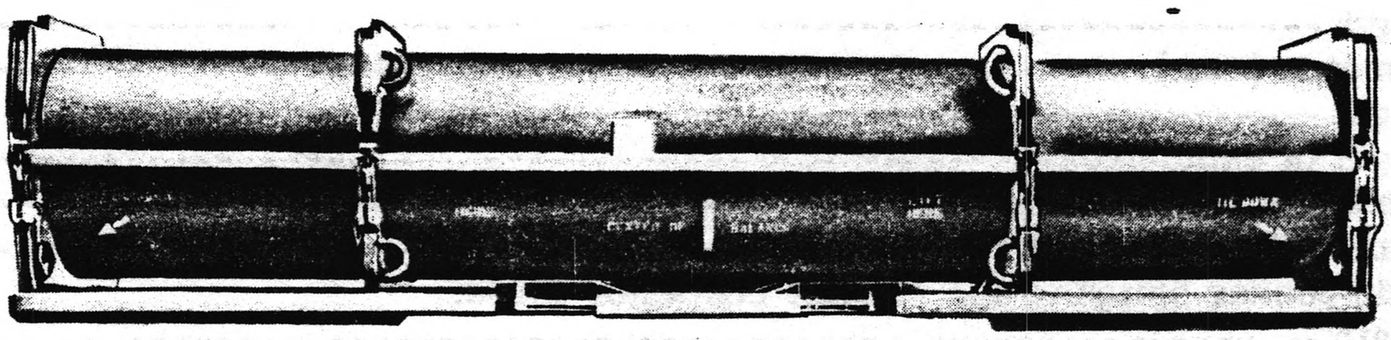

CONTAINER M468

MU-L1900

Federal Item Identification	FSN
DISPENSER AND BOMB, AIRCRAFT: CBU-46/A	1325-781-9624
DISPENSER, BOMB: SUU-7C/A	1325-927-1162
BOMB, FRAGMENTATION: BLU-66/B	None
SHIPPING AND STORAGE CONTAINER, BOMB DISPENSER: M468	8140-446-5366

GENERAL

The CBU-46/A is designed to be mounted on Air Force aircraft F-4C, F-5, F-84, F-85, F-100, F-104, F-105 and Navy Aircraft A4D and F8U. The dispenser contains 19 aluminum tubes that are loaded with 444 bombs BLU-66/B. The bomb BLU-66/B is an anti-personnel munition (sometimes referred to as the "jungle bomb") designed to penetrate jungle foliage. The center (K) dispenser tube is left empty due to weight limitations. The dispenser is designed to release two, four, or six tube-loads of bombs with each application of the pilot's firing button. In addition, there is also a salvo firing setting on the dispenser. The choice is made by rotating a manual selector switch on the top of the dispenser to the desired position prior to flight of the aircraft.

The fragmentation bomb BLU-66/B consists of three major components which provide the necessary operational sequence; they are: vane, fuze assembly, and body assembly. The vane assembly provides the necessary torque for arming the bomb. The fuze assembly provides the arming and ignition sequence. The body assembly provides the explosive storage volume and lethal fragmenting case. The operation of the bomb is accomplished through a fuzing concept in which angular velocity causes arming and, as the body interacts with foliage and terrain, spin decay occurs, detonating the bomb.

The CBU munition is stored and transported in the cylindrical steel shipping and storage container M468. An inspection port cover is located in the rear end for monitoring the humidity indicator in the tail cone protector.

CHARACTERISTICS

Bomb dispenser SUU-7C/A:	
Length	118.42 in.
Diameter (max)	15.6 in.
Distance between suspension lugs	14 in.
Weight (approx):	
Empty	165 lb
Loaded w/o nose cone plug and tail cone protector	880 lb
Loaded w/nose cone plug and tail cone protector	894 lb
Center of gravity (measured from nose) (w/o nose cone plug and tail cone protector):	
Empty	61.34 in.
Loaded	64.00 in.
Fragmentation bomb BLU-66/B:	
Length	3.71 in.
Diameter (max)	2.8 in.
Weight	1.6 lb
Weight of explosives	0.26 lb
Number of bombs in dispenser	444
Total explosive weight (479 bombs)	115 lb (approx)
Bomb dispenser shipping and storage container M468:	
Length	136 in.
Width	31 in.
Height	29 in.
Weight:	
Empty	550 lb
With loaded dispenser	1450 lb
Cube	70.75 cu ft
Center of gravity from front end	67.9 in.
Logistics:	
Quantity-distance class:	
Air Force	5(M)
Army	7
Storage compatibility group	G
DOT shipping class	A
DOT shipping designation	Explosive bomb
Coast Guard classification	VII
Aircraft speed range	350-550 knots

REFERENCES: TM 9-1325-202-50/1/TO 11A1-5-1-7

DISPENSER AND BOMB, AIRCRAFT: CBU-49A/B

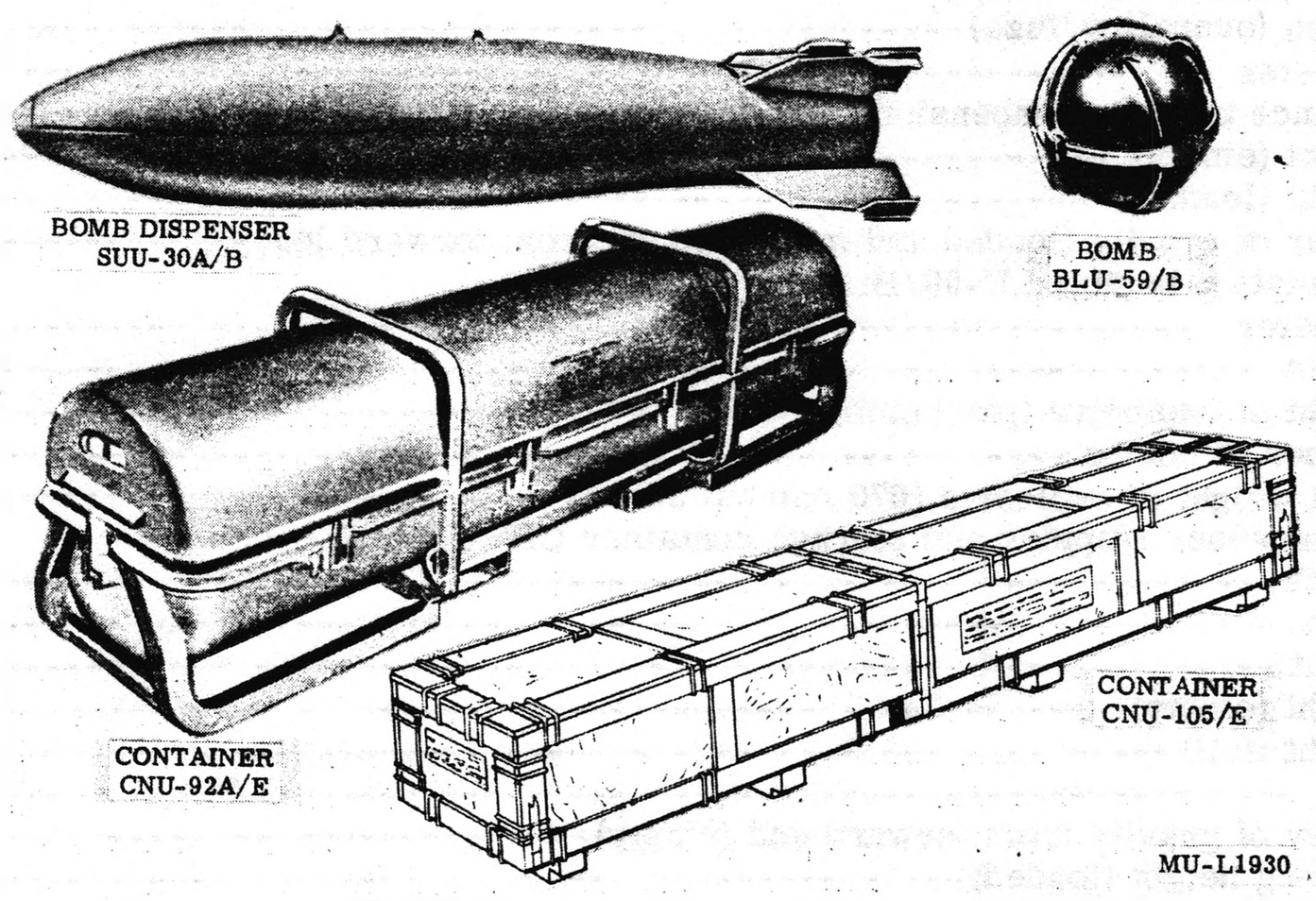

Federal Item Identification	FSN
DISPENSER AND BOMB, AIRCRAFT: CBU-49A/B (in CNU-92A/E)	1325-809-2567
DISPENSER AND BOMB, AIRCRAFT: CBU-49A/B (in CNU-105/E)	1325-935-9193
DISPENSER, BOMB: SUU-30A/B	1325-832-5231
BOMB, FRAGMENTATION: BLU-59/B	None
SHIPPING AND STORAGE CONTAINER, BOMB DISPENSER: CNU-92A/E	8140-832-5232
SHIPPING AND STORAGE CONTAINER, BOMB DISPENSER: CNU-105/E	8140-ND000113G

GENERAL

The CBU-49A/B is an aircraft-launched, free-fall, unguided, cluster bomb intended for tactical use against such targets as light materiel and personnel. It is designed for use on aircraft equipped with standard 14-inch spaced rack pylons. The major components of the CBU-49A/B are: the dispenser SUU-30A/B, the bomb BLU-59/B, and the mechanical time fuze M907E1 or M907E2. The dispenser is loaded with 670 bombs BLU-59/B.

The bomb BLU-59/B is a spin-armed, self-dispersing, fragmenting submunition that detonates at the end of a variable delay. The dispenser is divided longitudinally. The two halves are locked together by a nose locking cap forward and a plate at the aft end. Upon release, the arming wire is withdrawn, initiating the fuze time-delay cycle. When the fuze functions, the dispenser opens longitudinally, releasing the payload. When the time-delay bomb fuzes function, the bombs BLU-59/B explode, producing a large number of small, high-velocity fragments.

The CBU-49A/B is stored and transported in the steel shipping and storage container CNU-92A/E or in the wooden shipping and storage container CNU-105/E. The CNU-105/E has been pressure treated with preservative to withstand storage under adverse climatic conditions.

CHARACTERISTICS

Bomb dispenser SUU-30A/B:	
Length (overall w/fuze)	93.00 in.
Diameter	16.00 in.
Distance between suspension lugs	14.00 in.
Weight (empty)	190.00 lb
Weight (loaded)	825.00 lb
Center of gravity (loaded and measured aft from forward lug)	6.00 in.
Fragmentation bomb BLU-59/B:	
Diameter	2.78 in.
Weight	0.95 lb
Weight of explosive (per bomb)	0.183 lb
Number of bombs	670
Total weight of explosive (670 bombs) approx	122 lb
Bomb dispenser shipping and storage container CNU-92A/E:	
Length	95.13 in.
Width	23.13 in.
Height	24.94 in.
Weight (empty)	340.00 lb
Weight (full)	1,165.00 lb
Cube	32.00 cu ft
Center of gravity from forward end (empty)	48.5 in.
Stacking height (loaded)	5 containers
Bomb dispenser shipping and storage container CNU-105/E:	
Length	94.13 in.
Width	22.25 in.
Height	25.88 in.
Weight (empty)	160.00 lb
Weight (full)	985.00 lb
Cube	32.00 cu ft
Center of gravity from forward end (empty)	41.00 in.
Stacking height (loaded)	4 containers
Logistics:	
Quantity-distance class	7
Storage compatibility group	G
DOT shipping class	A
DOT shipping designation	Explosive bomb
Coast Guard classification	VII
Aircraft speed range	400-550 knots
Bomb pattern dimensions	Variable

REFERENCE: T.O. 11A1-5-18-7
NAVAIR 11-5A-1

DISPENSER AND BOMB, AIRCRAFT: CBU-49/B (MOD)

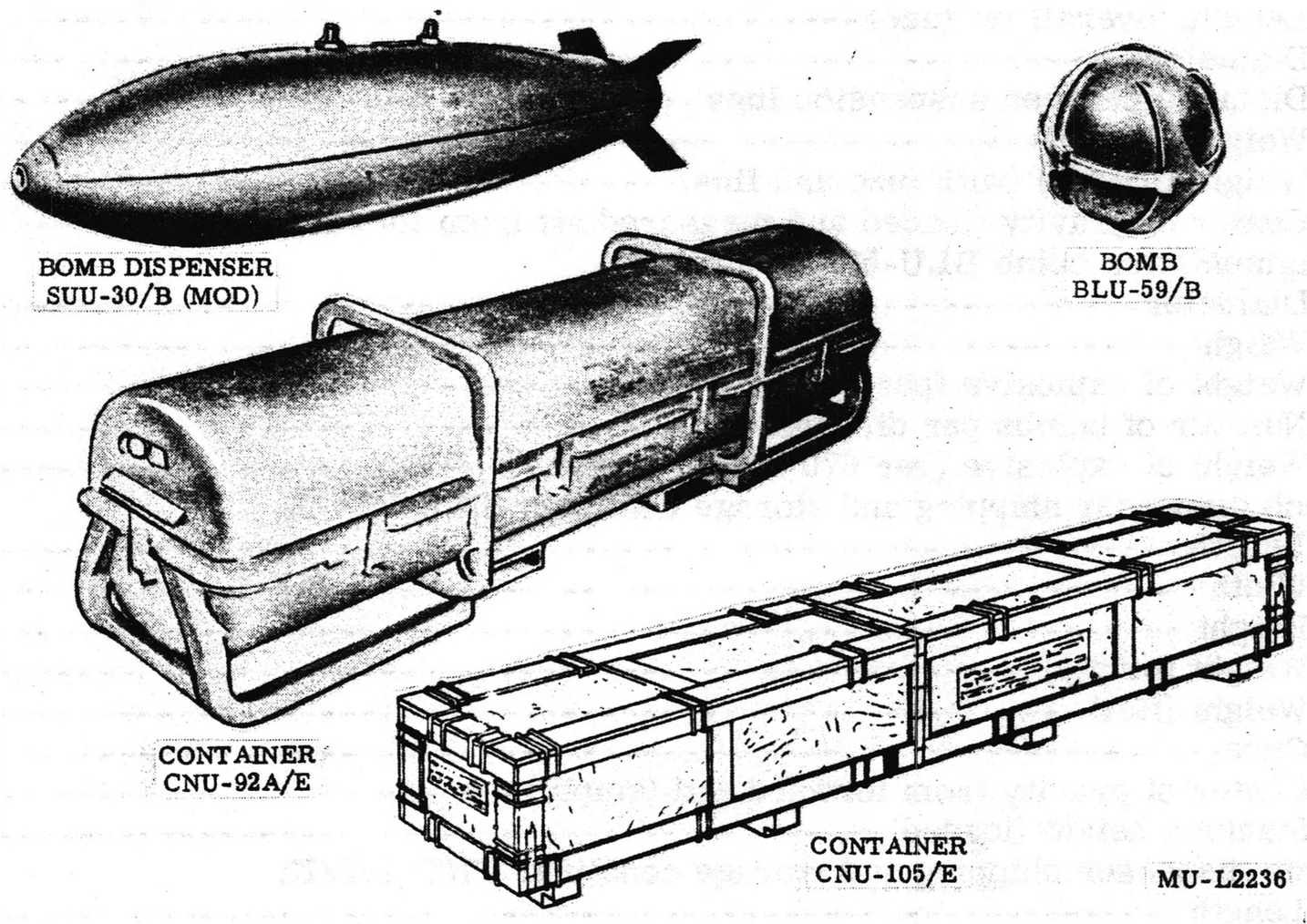

Federal Item Identification

DISPENSER AND BOMB, AIRCRAFT: CBU-49/B (MOD) (in container CNU-92A/E)---1325-809-2566
DISPENSER AND BOMB, AIRCRAFT: CBU-49/B (MOD) (in container CNU-105/E)---1325-935-9192
DISPENSER, BOMB: SUU-30/B (MOD)----------1325-ND-000031G
BOMB, FRAGMENTATION: BLU-59/B----------None
SHIPPING AND STORAGE CONTAINER, BOMB DISPENSER: CNU-92A/E ----------8140-832-5232
SHIPPING AND STORAGE CONTAINER, BOMB DISPENSER: CNU-105/E----------8140-ND000113G

GENERAL

The CBU-49/B (MOD) is an aircraft-launched, free-fall, unguided, cluster bomb intended for tactical use against such targets as light materiel and personnel. It is designed for use on aircraft equipped with standard 14-inch spaced bomb rack pylons. The major components of the CBU-49/B (MOD) are: the dispenser SUU-30/B (MOD), the bomb BLU-59/B, and the mechanical time fuze M907E1 or M907E2. The dispenser is loaded with 670 bombs BLU-59/B.

The bomb BLU-59/B is a spin-armed, self-dispersing, fragmenting submunition that detonates at the end of a variable delay. The dispenser is divided longitudinally. The two halves are locked together by a nose locking cap forward and a plate at the aft end. Upon release, the arming wire is withdrawn, initiating the fuze time-delay cycle (anywhere from 4 seconds to 92 seconds). When the fuze functions, the dispenser opens longitudinally, releasing the payload. When the time-delay bomb fuzes function, the bombs BLU-59/B explode, producing a large number of small, high-velocity fragments.

The CBU-49/B (MOD) is stored and transported in the steel shipping and storage container CNU-92A/E, or the wooden shipping and storage container CNU-105/E. The CNU-105/E has been pressure-treated with preservative to withstand storage under adverse climatic conditions.

CHARACTERISTICS

Bomb dispenser SUU-30/B (MOD):	
Length, overall (w/fuze)	92.60 in.
Diameter	16.00 in.
Distance between suspension lugs	14.00 in.
Weight (empty)	190.00 lb
Weight (loaded) (with fuze and fins)	820.00 lb
Center of gravity (loaded and measured aft from forward lug)	6.00 in.
Fragmentation bomb BLU-59/B:	
Diameter	2.78 in.
Weight	0.95 lb
Weight of explosive (per bomb)	0.183 lb
Number of bombs per dispenser	670
Weight of explosive (per 670 bombs (approx))	122 lb
Bomb dispenser shipping and storage container CNU-92A/E:	
Length	95.13 in.
Width	23.13 in.
Height	24.94 in.
Weight (empty)	340.00 lb
Weight (full)	1,160.00 lb
Cube	32.00 cu ft (approx)
Center of gravity from forward end (empty)	48.5 in.
Stacking height (loaded)	5 containers
Bomb dispenser shipping and storage container CNU-105/E:	
Length	94.13 in.
Width	22.25 in.
Height	25.88 in.
Weight (empty)	160.00 lb
Weight (full)	980.00 lb
Cube	32.00 cu ft
Center of gravity from forward end (empty)	41.00 in.
Stacking height (loaded)	4 containers
Logistics:	
Quantity-distance class	7
Storage compatibility group	G
DOT shipping class	A
DOT shipping designation	Explosive bomb
Coast Guard classification	VII
Aircraft speed range	400-550 knots
Bomb pattern dimensions	Variable

REFERENCE: TO 11A1-5-18-7
NAVAIR 11-5A-1

DISPENSER AND BOMB, AIRCRAFT: CBU-49B/B

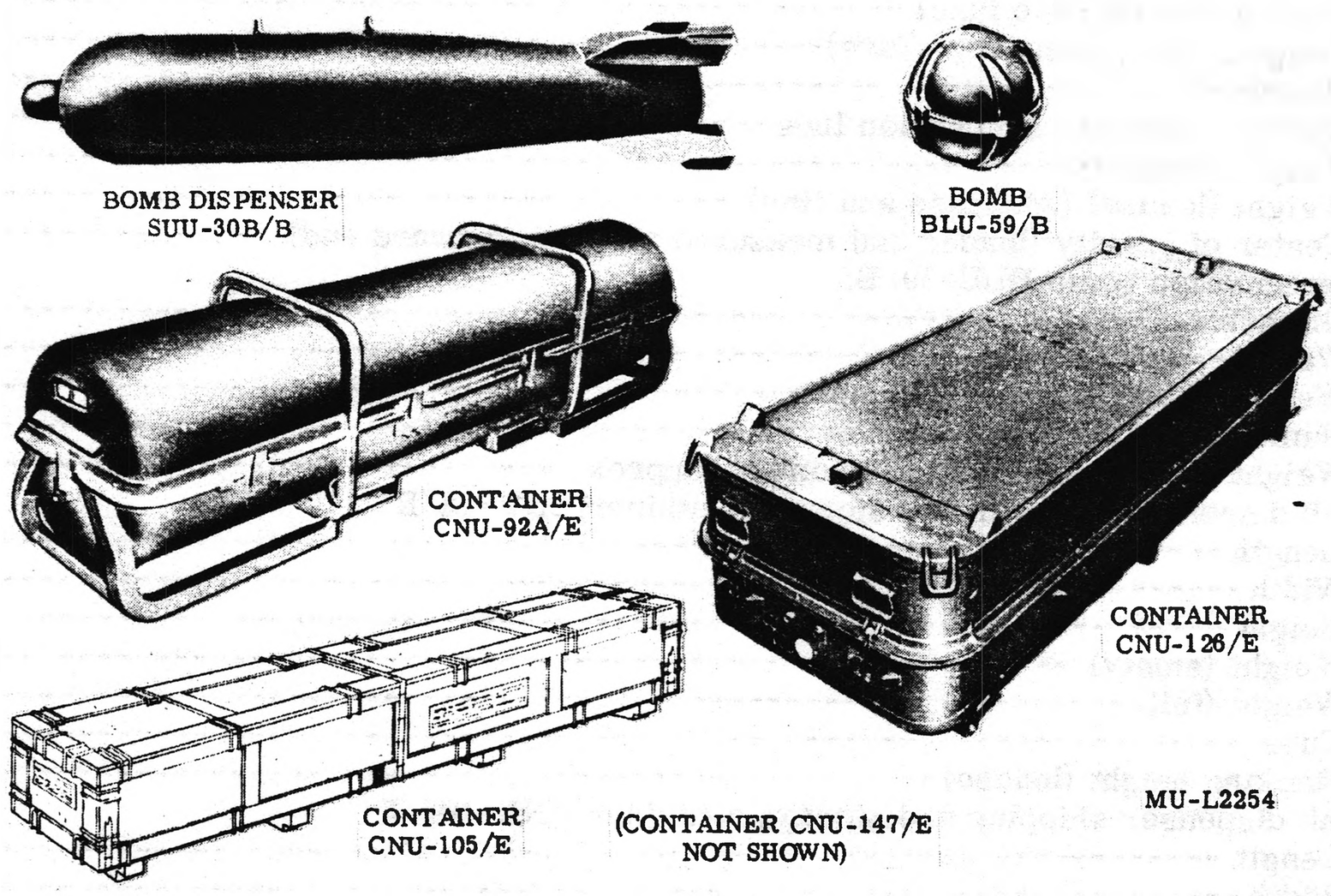

Federal Item Identification	FSN
DISPENSER AND BOMB, AIRCRAFT: CBU-49B/B (in CNU-92A/E)	1325-809-2568
DISPENSER AND BOMB, AIRCRAFT: CBU-49B/B (in CNU-105/E)	1325-935-9184
DISPENSER AND BOMB, AIRCRAFT: CBU-49B/B (in CNU-126/E)	1325-143-7094
DISPENSER AND BOMB, AIRCRAFT: CBU-49B/B (in CNU-147/E)	1325-109-9390
DISPENSER, BOMB: SUU-30B/B	1325-087-6426
BOMB, FRAGMENTATION: BLU-59/B	None
SHIPPING AND STORAGE CONTAINER, BOMB DISPENSER: CNU-92A/E	8140-832-5232
SHIPPING AND STORAGE CONTAINER, BOMB DISPENSER: CNU-105/E	8140-ND-000113G
SHIPPING AND STORAGE CONTAINER, BOMB DISPENSER: CNU-126/E	8140-NC-130580GAQ
SHIPPING AND STORAGE CONTAINER, BOMB DISPENSER: CNU-147/E	1325-109-9381AQ

GENERAL

The CBU-49B/B is an aircraft-launched, free-fall, unguided, cluster bomb intended for tactical use against such targets as light materiel and personnel. It is designed for use on aircraft equipped with standard 14-inch spaced rack pylons. The major components of the CBU-49B/B are: the dispenser SUU-30B/B, the bomb BLU-59/B, and the mechanical time fuze M907E1 or M907E2 or electrical fuze FMU-26A/B, or FMU-56/B. The dispenser is loaded with 670 bombs BLU-59/B.

The bomb BLU-59/B is a spin-armed, self-dispensering, fragmenting submunition that detonates at the end of a variable delay. The dispenser is divided longitudinally. The two halves are locked together by a nose locking cap forward and a plate at the aft end. Upon release, the delay cycle of the nose fuze is initiated. When the fuze functions, the dispenser opens longitudinally, releasing the payload. When the time-delay bomb fuzes function, the bombs BLU-59/B explode, producing a large number of small, high-velocity fragments.

One each CBU-49B/B is stored and transported in the steel shipping and storage container CNU-92A/E and the wooden shipping and storage container CNU-105/E. Two each CBU-49B/B are stored and transported in the steel container CNU-126/E and the wirebound wooden storage container CNU-147/E.

CHARACTERISTICS

Bomb dispenser SUU-30B/B:	
Length overall (w/o fuze)	85.49 in.
Length, max. overall (w/fuze)	93.00 in.
Diameter	16.00 in.
Distance between suspension lugs	14.00 in.
Weight (empty)	200.00 lb
Weight (loaded) (with fuze and fins)	830.00 lb
Center of gravity (loaded and measured aft from forward end)	6.00 lb
Fragmentation bomb BLU-59/B:	
Diameter	2.78 in.
Weight	0.95 lb
Weight of explosive (per bomb)	0.183 lb
Number of bombs per dispenser	670
Weight of explosive (per 670 bombs) (approx)	122 lb
Bomb dispenser shipping and storage container CNU-92/E:	
Length	95.13 in.
Width	23.13 in.
Height	24.94 in.
Weight (empty)	340.00 lb
Weight (full)	1170.00 lb
Cube	32.00 cu ft
Stacking height (loaded)	5 containers
Bomb dispenser shipping and storage container CNU-105/E:	
Length	94.13 in.
Width	22.25 in.
Height	25.88 in.
Weight (empty)	160.00 lb
Weight (full)	990.00 lb
Cube	32.00 cu ft
Stacking height (loaded)	4 containers
Bomb dispenser shipping and storage container CNU-126/E:	
Length	97 in.
Width	37 in.
Height	24 in.
Weight (empty)	500 lb
Weight (full)	2160 lb
Cube	49.8 cu ft
Stacking height (loaded)	5 containers
Bomb dispenser shipping and storage container CNU-147/E:	
Length	39 in.
Width	89 in.
Height	27 in.
Weight (empty)	245 lb
Weight (loaded)	1895 lb
Cube	54.3 cu ft
Stacking height (loaded)	5 containers
Logistics:	
Quantity-distance class	7
Storage compatibility group	G
DOT shipping class	A
DOT shipping designation	Explosive bomb
Coast Guard classification	VII
Aircraft speed range	400-550 knots
Bomb pattern dimensions	Variable

REFERENCE: TO 11A1-5-18-7
NAVAIR 11-5A-1

DISPENSER AND BOMB, AIRCRAFT: CBU-49C/B

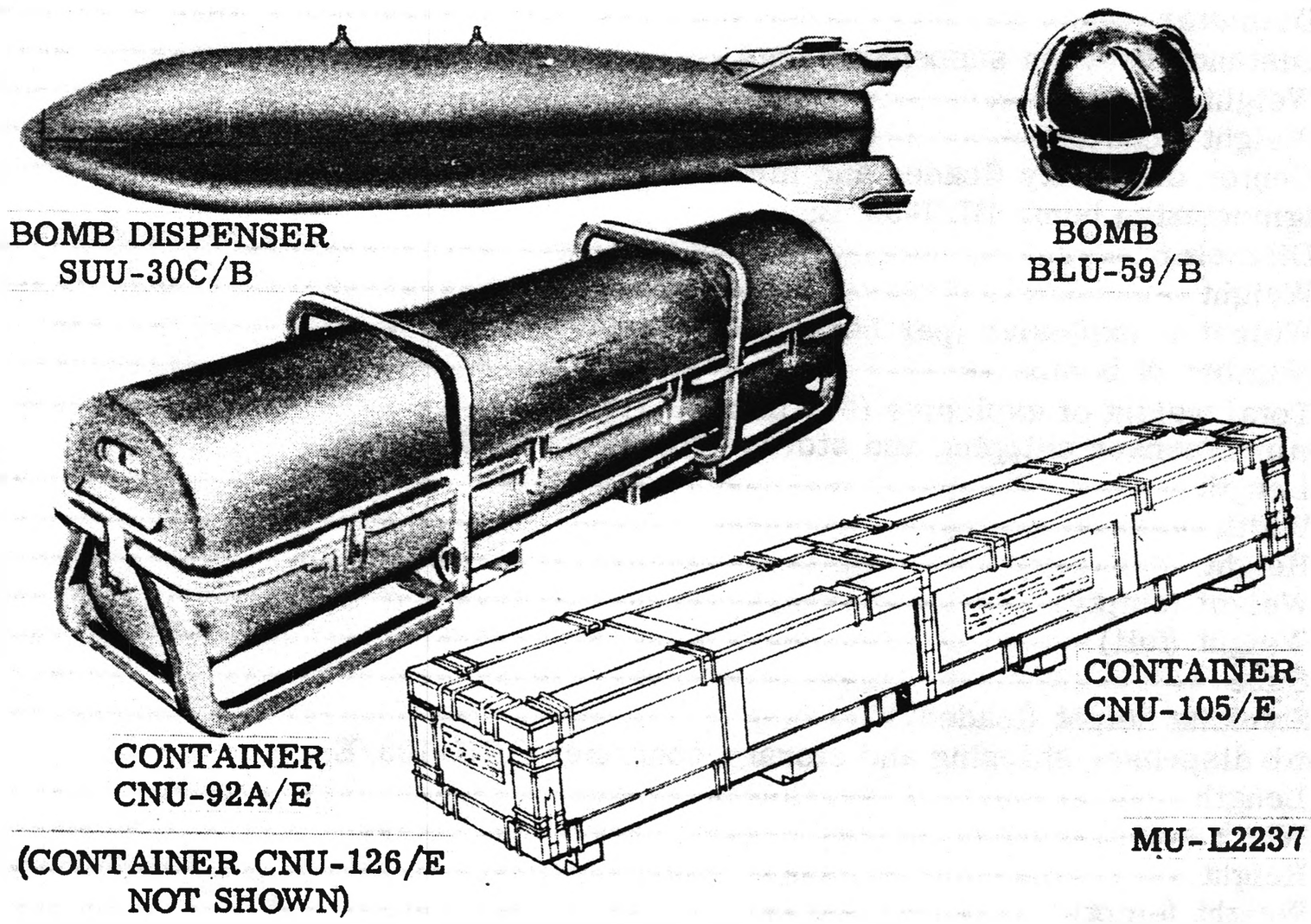

Federal Item Identification	FSN
DISPENSER AND BOMB, AIRCRAFT: CBU-49C/B (in CNU-92A/E)	1325-809-2569
DISPENSER AND BOMB, AIRCRAFT: CBU-49C/B (in CNU-105/E)	1325-935-9194
DISPENSER AND BOMB, AIRCRAFT: CBU-49C/B (in CNU-126/E)	1325-143-7090
DISPENSER, BOMB: SUU-30C/B	1325-809-1486
BOMB, FRAGMENTATION: BLU-59/B	None
SHIPPING AND STORAGE CONTAINER, BOMB DISPENSER: CNU-92A/E	8140-832-5232
SHIPPING AND STORAGE CONTAINER, BOMB DISPENSER: CNU-105/E	8140-ND-000113G
SHIPPING AND STORAGE CONTAINER, BOMB DISPENSER: CNU-126/E	8140-NC-130580GAQ

GENERAL

The CBU-49C/B is an aircraft-launched, free-fall, unguided, cluster bomb intended for tactical use against such targets as light materiel and personnel. It is designed for use on aircraft equipped with standard 14-inch spaced rack pylons. The major components of the CBU-49C/B are: the dispenser SUU-30C/B, the bomb BLU-59/B, and the mechanical time fuze M907E1 or M907E2. The dispenser is loaded with 640 bombs BLU-59/B.

The bomb BLU-59/B is a spin-armed, self-dispersing fragmenting submunition that detonates at the end of a variable delay. The dispenser is divided longitudinally. The two halves are locked together by a nose locking cap forward and a plate at the aft end. Upon release, the arming wire is withdrawn, initiating the fuze time-delay cycle. When the fuze functions, the dispenser opens longitudinally releasing the payload. When the time-delay bomb fuzes function, the bombs BLU-59/B explode, producing a large number of small, high-velocity fragments.

One each CBU-49C/B is stored and transported in the steel shipping and storage container CNU-92A/E and the wooden shipping and storage container CNU-105/E. Two each CBU-49C/B are stored and transported in the steel container CNU-126/E.

CHARACTERISTICS

Bomb dispenser SUU-30C/B:	
Length overall (w/fuze)	93.00 in.
Diameter	16.00 in.
Distance between suspension lugs	14.00 in.
Weight (empty)	190.00 lb
Weight (loaded)	825.00 lb
Center of gravity (loaded and measured aft from forward lug)	6.00 in.
Fragmentation bomb BLU-59/B:	
Diameter	2.78 in.
Weight	0.95 lb
Weight of explosive (per bomb)	0.183 lb
Number of bombs	640
Total weight of explosive (640 bombs) approx	117 lb
Bomb dispenser shipping and storage container CNU-92A/E:	
Length	95.13 in.
Width	23.13 in.
Height	24.94 in.
Weight (empty)	340.00 lb
Weight (full)	1,165.00 lb
Cube	32.00 cu ft
Stacking height (loaded)	5 containers
Bomb dispenser shipping and storage container CNU-105/E:	
Length	94.13 in.
Width	22.25 in.
Height	25.88 in.
Weight (empty)	160.00 lb
Weight (full)	985.00 lb
Cube	32.00 cu ft
Stacking height (loaded)	4 containers
Bomb dispenser shipping and storage container CNU-126/E:	
Length	97
Width	37
Height	24
Weight (empty)	500 lb
Weight (full)	2160 lb
Cube	49.8 cu ft
Stacking height (loaded)	5 containers
Logistics:	
Quantity-distance class	7
Storage compatibility group	G
DOT shipping class	A
DOT shipping designation	Explosive bomb
Coast Guard classification	VII
Aircraft speed range	400-550 knots
Bomb pattern dimensions	Variable

REFERENCES: T.O. 11A1-5-18-7
NAVAIR 11-5A-1

DISPENSER AND BOMB, AIRCRAFT: CBU-52/B

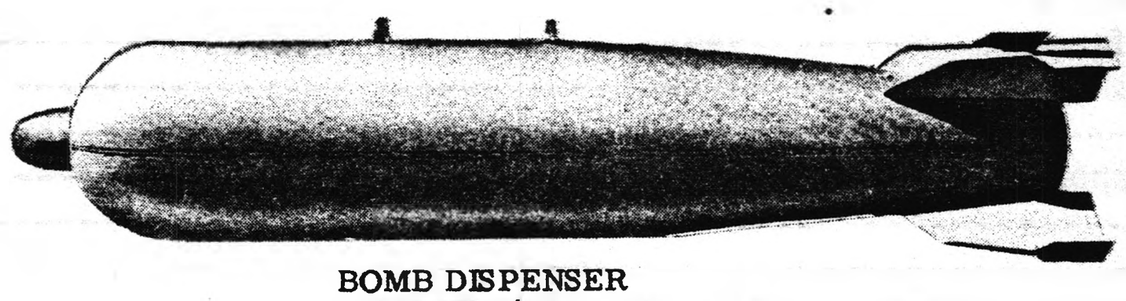

BOMB DISPENSER
SUU-30B/B

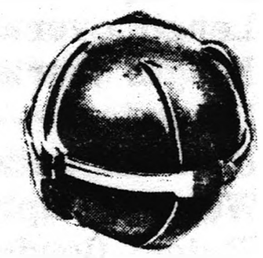

BOMB
BLU-61/B

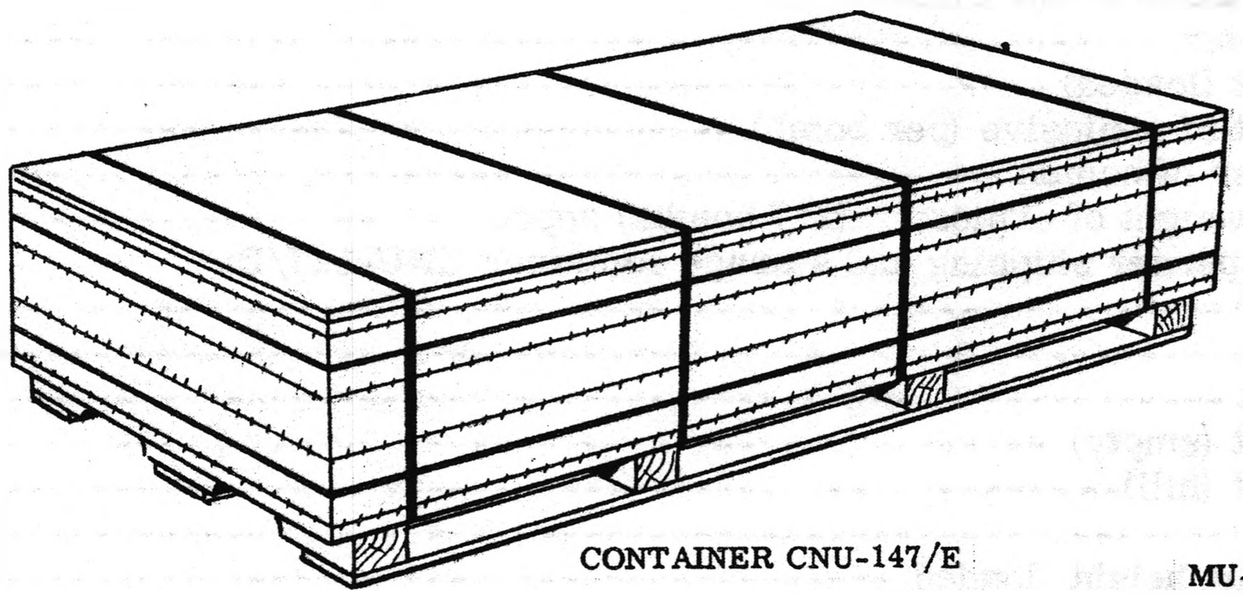

CONTAINER CNU-147/E

MU-L1929

Federal Item Identification	FSN
DISPENSER AND BOMB, AIRCRAFT: CBU-52/B (IN CNU-147/E)	1325-563-5161
DISPENSER AND BOMB, AIRCRAFT: CBU-52 (D-1)/B (IN CNU-147/E)	1325-563-5163
DISPENSER AND BOMB, AIRCRAFT: CBU-52 (T-1)/B (IN CNU-147/E)	1325-563-5171
DISPENSER, BOMB: SUU-30B/B	1325-087-6426
BOMB, FRAGMENTATION: BLU-61/B	None
SHIPPING AND STORAGE CONTAINER, BOMB DISPENSER: CNU-147/E	1325-109-9381AQ

GENERAL

The CBU-52/B is an aircraft-launched, free-fall, unguided, cluster bomb intended for tactical use against such targets as light materiel and personnel. It is designed for use on aircraft equipped with standard 14-inch spaced bomb rack pylons. The major components of the CBU-52/B are: the dispenser SUU-30B/B, the bomb BLU-61/B, and the mechanical time fuze M907E1 or M907E2, or electrical fuze FMU-26A/B, or FMU-56/B. The dispenser is loaded with 217 bombs BLU-61/B.

The bomb BLU-61/B is a spin-armed, self-dispersing, fragmenting submunition that detonates upon impact. The dispenser is divided longitudinally. The two halves are locked together by a nose locking cap forward and a plate at the aft end. Upon release, the time delay cycle of the nose fuze is initiated. When the fuze functions, the dispenser opens longitudinally, releasing the payload. Upon impact, the 217 bombs BLU-61/B explode, producing a small number of large, high-velocity fragments.

Two each CBU-52/B are stored and transported in the wooden shipping and storage container CNU-147/E.

CHARACTERISTICS

Bomb dispenser SUU-30B/B:	
Length overall (w/o fuze)	85.49 in.
Length overall (w/fuze)	93.00 in.
Diameter	16.00 in.
Distance between suspension lugs	14.00 in.
Weight (empty)	200.00 lb
Weight (loaded)	740 lb
Center of gravity (loaded and measured aft from forward lug)	6.00 in.
Fragmentation bomb BLU-61/B:	
Diameter	3.88 in.
Weight (loaded)	2.45 lb
Weight of explosive (per bomb)	0.65 lb
Number of bombs	217
Total weight of explosive (217 bombs) approx	141 lb
Bomb dispenser shipping and storage container CNU-147/E:	
Length	39 in.
Width	89 in.
Height	27 in.
Weight (empty)	245.00 lb
Weight (full)	1735.00 lb
Cube	54.3 cu ft
Stacking height (loaded)	5 containers
Logistics:	
Quantity-distance class	7
Storage compatibility group	G
DOT shipping class	A
DOT shipping designation	Explosive bomb
Coast Guard classification	VII
Aircraft speed range	400-550 knots
Bomb pattern dimensions	Variable

REFERENCES: TO 11A1-5-18-7

DISPENSER AND BOMB, AIRCRAFT: CBU-63/B

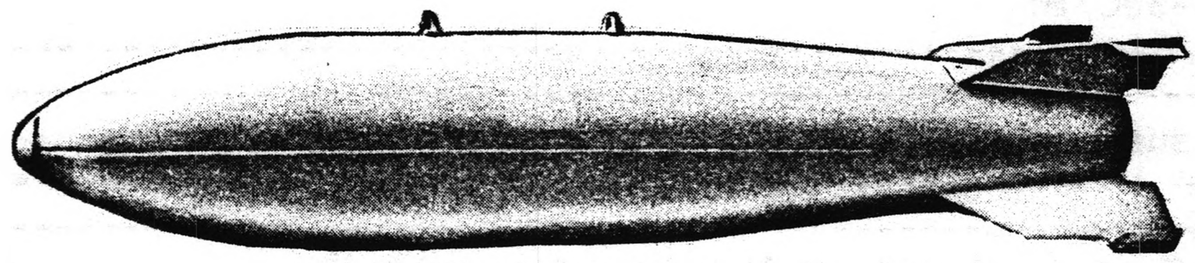

BOMB DISPENSER
SUU-30C/B

GRENADE M40

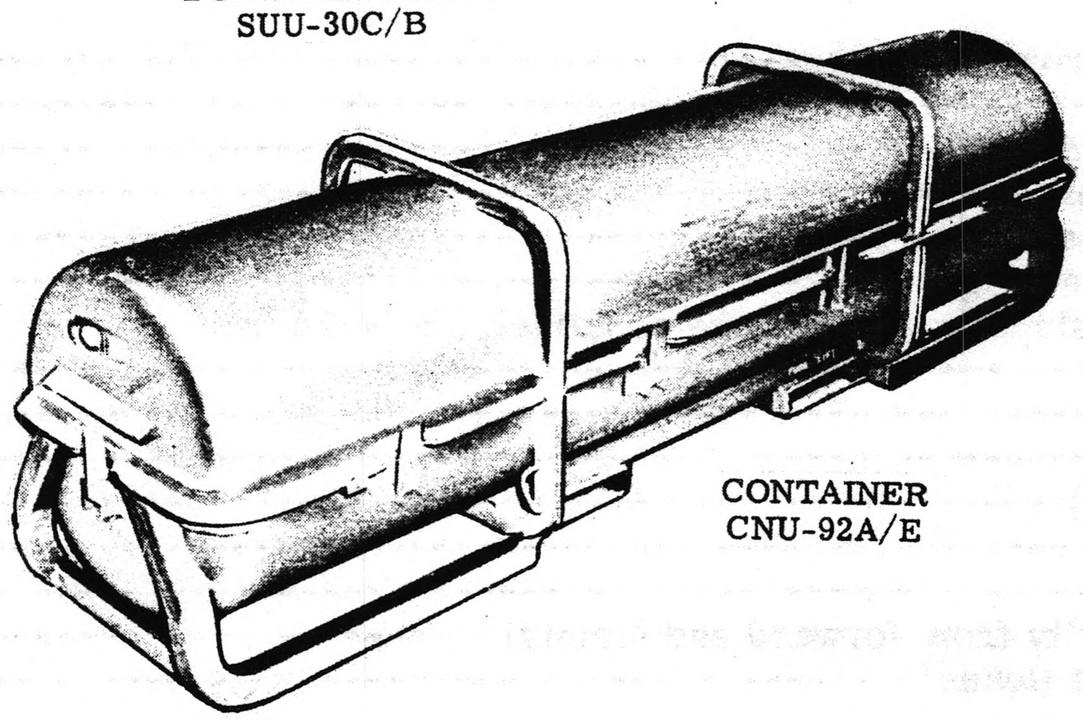

CONTAINER
CNU-92A/E

MU-L2228

Federal Item Identification	FSN
DISPENSER AND BOMB, AIRCRAFT: CBU-63/B (in CNU-92A/E)	1325-133-7058
DISPENSER, BOMB: SUU-30C/B	1325-809-1485
GRENADE M40	None
SHIPPING AND STORAGE CONTAINER, BOMB DISPENSER: CNU-92A/E	8140-832-5232

GENERAL

The CBU-63/B is an aircraft-launched, free-fall, unguided, cluster bomb intended for tactical use against such targets as light materiel and personnel. It is designed for use on aircraft equipped with standard 14-inch spaced bomb rack or pylons. The major components of the CBU-63/B are: the dispenser SUU-30C/B, grenade M40, and the mechanical time fuze M907E1 or M907E2. The dispenser is loaded with 2025 grenades M40.

The grenade M40 detonates upon impact with surfaces such as water, mud, soft earth or any harder surface and breaks into fragments which are propelled in all directions. When the grenades are released from the dispenser and enter the airstream, the grenade flutes produce a high rate of spin which induces dispersion and initiates arming of the grenade fuze.

The dispenser is divided longitudinally. The two halves are locked together by a nose locking cap forward and a plate at the aft end. Upon release, the arming wire is withdrawn, initiating the fuze time-delay cycle. When the fuze functions, the dispenser opens longitudinally, releasing the payload.

The CBU-63/B is stored and transported in the steel shipping and storage container CNU-92A/E.

CHARACTERISTICS

Bomb dispenser SUU-30C/B:	
Length overall (w/fuze)	93.00 in.
Diameter	16.00 in.
Distance between suspension lugs	14.00 in.
Weight (empty)	190.00 lb
Weight (loaded)	825.00 lb
Center of gravity (loaded and measured aft from forward lug)	6.50 in.
Grenade M40:	
Diameter (approx)	1.7 in.
Weight	0.3 lb
Explosive weight	0.058 lb
Explosive filler	Comp B4
Number of grenades	2025
Total explosive weight	124 lb
Bomb dispenser shipping and storage container CNU-92A/E:	
Length	95.13 in.
Width	23.13 in.
Height	24.94 in.
Weight (empty)	340.00 lb
Weight (full)	1,165.00 lb
Cube	32.00 cu ft
Center of gravity from forward end (empty)	48.5 in.
Stacking height (loaded)	5 containers
Logistics:	
Quantity-distance class	7
Storage compatibility group (Army)	G
DOT shipping class	A
DOT shipping designation	Explosive bomb
Coast Guard classification	VII
Aircraft speed range	400-550 knots
Bomb pattern dimensions	Variable

REFERENCE: NAVAIR 11-5A-1

DISPENSER AND MINE, AIRCRAFT: SUU-41B/A LOADED WITH MINE CANISTERS CDU-4/B

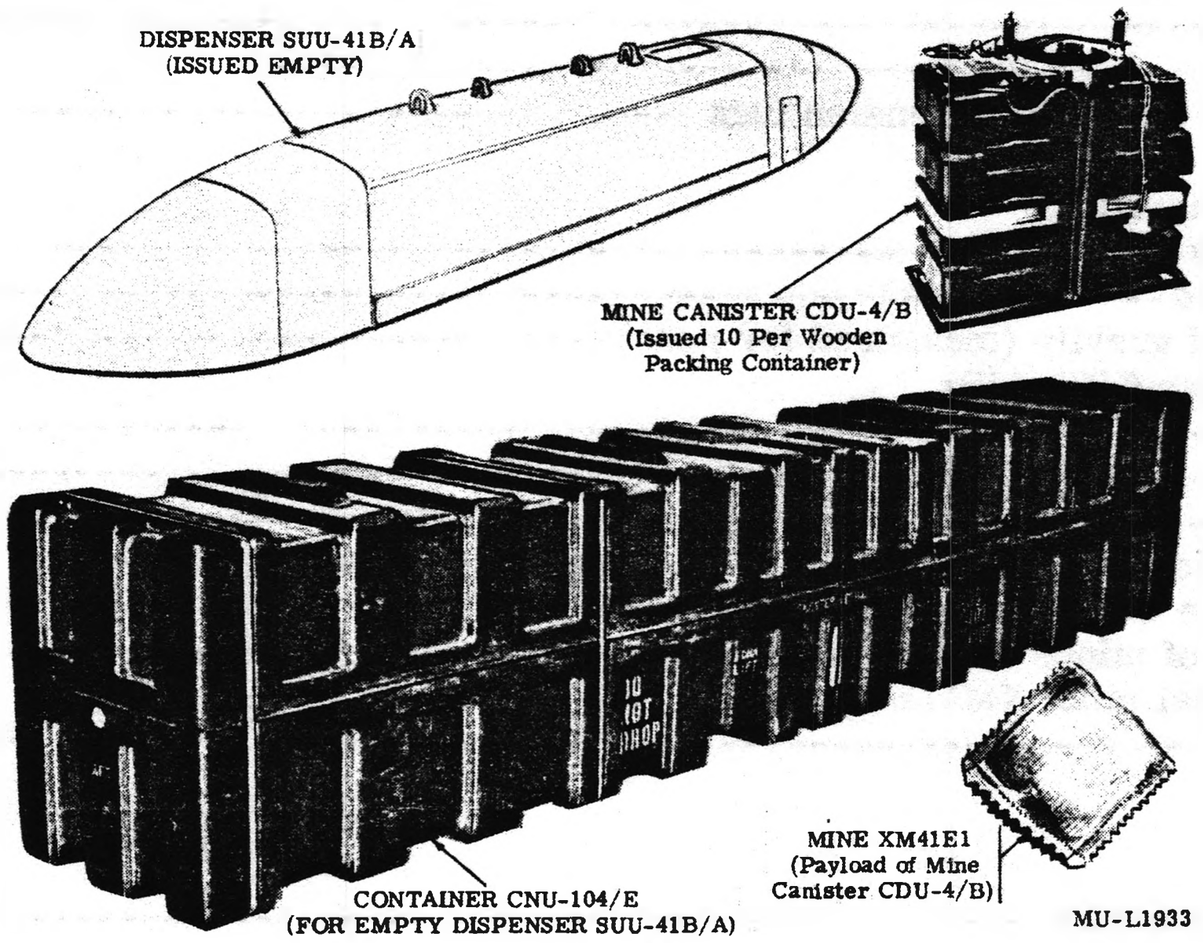

Federal Item Identification	FSN
DISPENSER AND MINE, AIRCRAFT: SUU-41B/A (Loaded)	None
DISPENSER, MINE: SUU-41B/A (Empty)	Not Available
CANISTER, MINE: CDU-4/B (Kit of 10)	1345-034-4198
MINE, ANTIPERSONNEL: XM41E1	None
SHIPPING AND STORAGE CONTAINER, MINE DISPENSER: CNU-104/E	8140-089-5888

GENERAL

The SUU-41B/A consists of a reusable dispenser loaded with 1,470 mines XM41E1. The dispenser containers 10 bays, each bay holding one mine canister CDU-4/B with 147 mines. It is designed to adapt to aircraft F4C. The dispenser is designed to release various combinations of canisters depending on the control panel mode selected with the actuation of an electrical circuit from the cockpit of the aircraft in either a manual or ripple mode.

The mine is a "gravel"-type mine that is self-arming, self-sterilizing, and nonmetallic. It is housed in olive-drab, straw, or brown-colored fabric with no marking and is shipped and stored in the loaded dispensing canister. It is used primarily for blast effects against personnel. The mine shape is rectangular, 2-3/4-inch by 3-inch, and about 3/4-inch thick. It consists of an explosive mix (wetted by a desensitizer), a fiberboard stiffener, and two sterilization pellets in perforated plastic subpacks, all contained within a double-layer, water-repellant, fabric housing.

Mine canisters (10 to a container) are shipped and stored in a wooden box along with 10 pressure cartridge assemblies and dispenser mounting hardware. The dispenser is available separately. The system is assembled by using personnel.

CHARACTERISTICS

Mine dispenser SUU-41B/A:	
Length	141.50 in.
Width	15.30 in.
Height	16.50 in.
Distance between suspension lugs	30 in. or 14 in., as applicable
Weight (approx):	
Empty	230 lb
Loaded	690 lb
Center of gravity (measured for nose)	71 in.
Mine canister CDU-4/B:	
Length	14.5 in.
Width	6 5/16 in.
Height	15 in.
Weight (loaded) (approx)	45 lb
Explosive weight (approx)	3.35 lb
Number of mines	147
Antipersonnel mine XM41E1:	
Size	2-3/4-inch wide x 3-inch long x about 3/4-inch thick
Weight (approx)	2.1 to 2.3 ounces (59 to 64 grams) wet
Explosive mix:	
Total dry weight (nominal)	11 grams
Lead azide	3.2 grams
RDX	7.1 grams
Silica	0.7 grams
Ground glass	10 grams
Desensitizer	Sufficient amount of Type I Freon to saturate the mine
Mine dispenser shipping and storage container CNU-104/E:	
Length	43-1/8 in.
Width	36-1/2 in.
Height	24-1/4 in.
Weight (empty) (approx)	200 lb
Weight (loaded) (approx)	660 lb
Logistics:	
Quantity-distance class	7
Storage compatibility group	A
DOT shipping class	A
DOT shipping designation	Explosive Mines
Coast Guard classification	X-B

REFERENCES: TM 9-1345-204-50
TO 11A9-10-7

DISPENSER AND MINE, AIRCRAFT: SUU-41B/A LOADED WITH MINE CANISTERS CDU-5/B

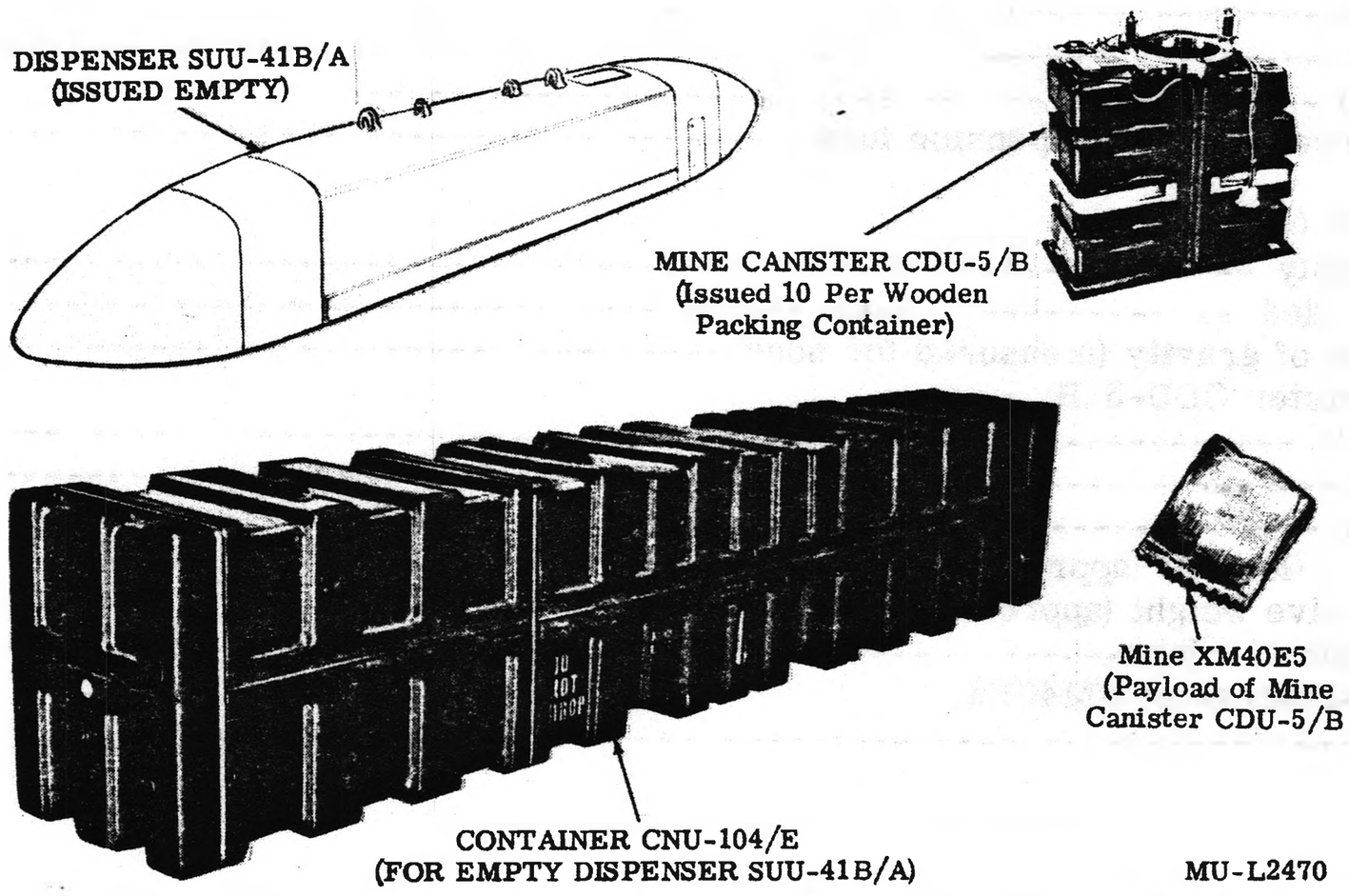

Federal Item Identification	FSN
DISPENSER AND MINE, AIRCRAFT: SUU-41B/A (Loaded)	None
DISPENSER, MINE: SUU-41B/A (Empty)	Not Available
CANISTER, MINE: CDU-5/B (Kit of 10)	1345-782-9800
MINE, ANTIPERSONNEL: XM40E5	None
SHIPPING AND STORAGE CONTAINER, MINE DISPENSER: CNU-104/E	8140-089-5888

GENERAL

The SUU-41B/A consists of a reusable dispenser loaded with 7,500 mines XM40E5. The dispenser contains 10 bays, each bay holding one mine canister CDU-5/B with 750 mines. It is designed to adapt to aircraft F4C. The dispenser is designed to release various combinations of canisters depending on the control panel mode selected with the actuation of an electrical circuit from the cockpit of the aircraft in either a manual or ripple mode.

This mine is self-arming and non-metallic. It is housed in olive-green, straw, or brown-colored fabric with no marking. The mine is rectangular and consists of a charge pack between two square plastic sheets (friction plates), all contained in a water repellent fabric housing. The charge pack consists of a 1-gram pyrotechnic mix wetted by a desensitizer in a nonpermeable plastic cup with a vapor-permeable plastic cover.

Mine canisters (10 to a container) are shipped and stored in a wooden box along with 10 pressure cartridge assemblies and dispenser mounting hardware. The dispenser is available separately. The system is assembled by using personnel.

CHARACTERISTICS

Mine dispenser SUU-41B/A:	
Length	141. 50 in.
Width	15. 30 in.
Height	16. 50 in.
Distance between suspension lugs	30 in. or 14 in., as applicable
Weight (approx):	
Empty	230 lb
Loaded	705 lb
Center of gravity (measured for nose)	71 in.
Mine canister CDU-5/B:	
Length	14. 5 in.
Width	6 5/16 in.
Height	15 in.
Weight (loaded) (approx)	46. 5 lb
Explosive weight (approx)	0. 78 lb
Number of mines	750
Antipersonnel mine XM40E5:	
Size	1-1/4-inch wide x 1-inch long x about 3/8-inch thick (approx)
Weight (approx)	0. 2 ounces (6. 0 grams) (wet)
Housing	Olive-green, straw, or brown water repellent fabric.
Explosive mix:	
Potassium chlorate	0. 3 grams
Red Phosphorus	0. 14 grams
Silica Gel	0. 46 grams
Magnesium oxide	0. 02 grams
Silica	0. 04 grams
Friction plates	Plastic sheet 3/4 in. square; two (2) per mine
Mine dispenser shipping and storage container CNU-104/E:	
Length	43-1/4 in.
Width	43-1/2 in.
Height	28-3/4 in.
Weight (empty) (approx)	200 lb
Weight (loaded) (approx)	650 lb
Logisitcs:	
Quantity-distance class	7
Storage compatibility group	A
DOT shipping class	A
DOT shipping designation	Explosive Mines
Coast Guard classification	X-B

REFERENCES: TM 9-1345-204-50
TO 11A9-10-7

DISPENSER AND MINE, AIRCRAFT: SUU-41B/A LOADED WITH MINE CANISTERS CDU-10/B

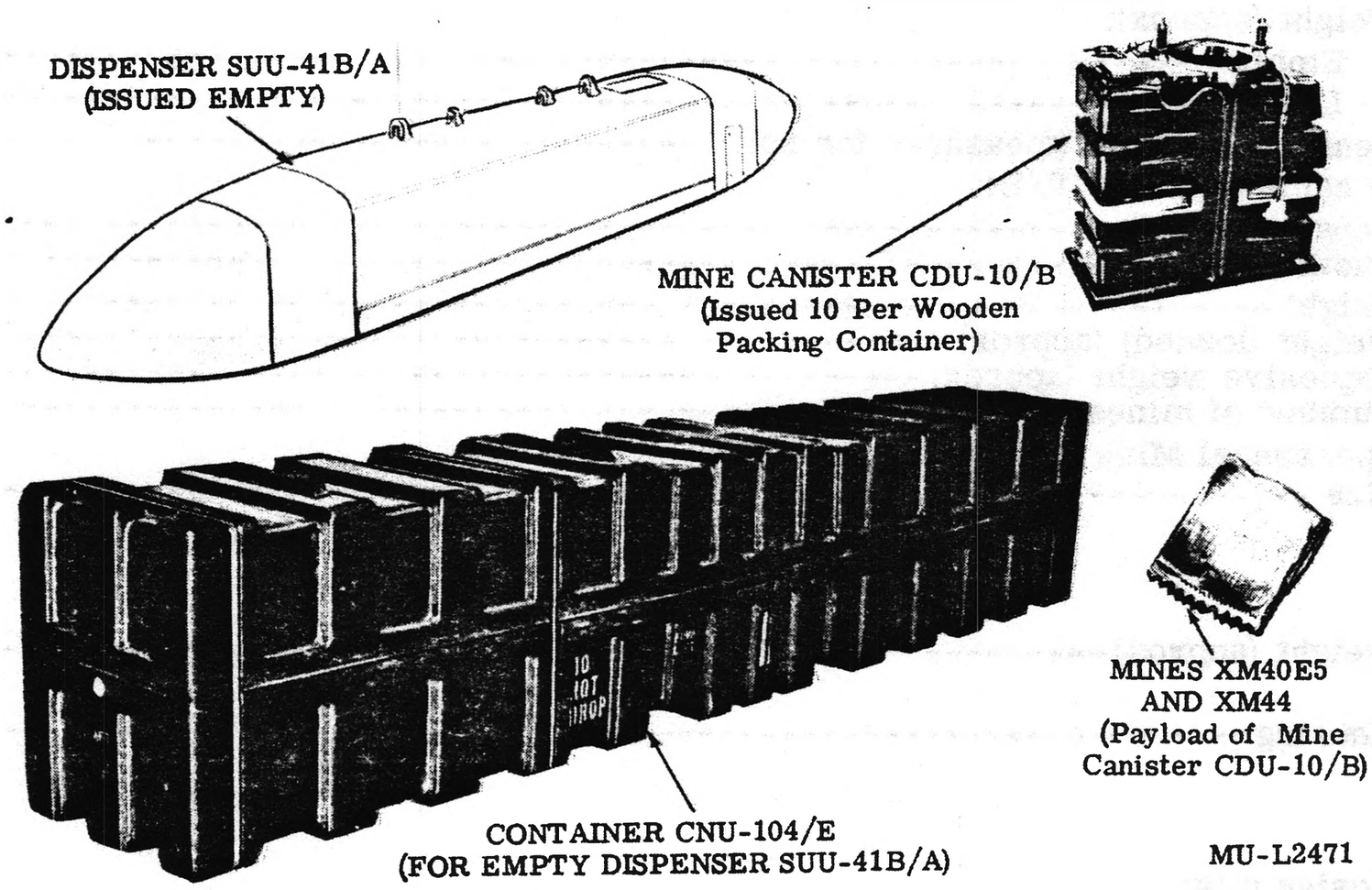

Federal Item Identification	FSN
DISPENSER AND MINE, AIRCRAFT: SUU-41B/A (Loaded)	None
DISPENSER, MINE: SUU-41B/A (Empty)	Not Available
CANISTER, MINE: CDU-10/B (Kit of 10)	1345-034-4125
MINE, ANTIPERSONNEL: XM40E5/XM44	None
SHIPPING AND STORAGE CONTAINER, MINE DISPENSER: CNU-104/E	8140-089-5888

GENERAL

The SUU-41B/A consists of a reusable dispenser loaded with 7, 280 mines XM40E5/XM44. The dispenser contains 10 bays, each bay holding one mine canister CDU-10/B with 680 mines XM40E5 (approx) and 48 mines XM44. The mines XM44 are contained in two subpacks. It is designed to adapt to aircraft F4C. The dispenser is designed to release various combinations of canisters depending on the control panel mode selected with the actuation of an electrical circuit from the cockpit of the aircraft in either a manual or ripple mode.

This mine is self-arming and non-metallic. It is housed in olive-green, straw, or brown-colored fabric with no marking. The mine is rectangular and consists of a charge pack between two square plastic sheets (firction plates), all contained in a water repellent fabric housing.

The charge pack consists of a 1-gram pyrotechnic mix wetted by a desensitizer in a nonpermeable plastic cup with a vapor-permeable plastic cover.

The anti-intrusion mine XM44 is an electronic device that produces an audible signal when distrubed. The electronic assembly and detonator are encapsulated in a square, hard-plastic case and the case is enclosed in an olive-green, straw, or brown water repellent fabric housing.

Mine canisters (10 to a container) are shipped and stored in a wooden box along with 10 pressure cartridge assemblies and dispenser mounting hardware. The dispenser is available separately. The system is assembled by using personnel.

CHARACTERISTICS

Mine dispenser SUU-41B/A:	
Length	141. 50 in.
Width	15. 30 in.
Height	16. 50 in.
Distance between suspension lugs	30 in. or 14 in., as applicable
Weight (approx):	
Empty	230 lb
Loaded	705 lb
Center of gravity (measured for nose)	71 in.
Mine canister CDU-10/B:	
Length	14-5 in.
Width	6 5/16 in.
Height	15 in.
Weight (loaded) (approx)	46. 5 lb
Explosive weight (approx)	0. 62 lb
Number of mines	728
Antipersonnel Mine XM40E5:	
Size	1-1/4-inch wide x 1-inch long x about 3/8-inch thick (approx)
Weight (approx)	0. 2 ounces (6. 0 gram) (wet)
Housing	Olive-green, straw, or brown water repellent fabric
Explosive mix:	
Postassium chlorate	0. 3 grams
Red phosphorus	0. 14 grams
Silica gel	0. 46 grams
Magnesium oxide	0. 02 grams
Silica	0. 04 grams
Friction plates	Plastic sheet 3/4 in. square; two (2) per mine
Anti-Intrusion Mine XM44:	
Size	1 3/8-in. wide, 1 3/8-in. long, 3/8-in. thick (approx).
Weight (subpack assembly)	2. 10 lb
Housing	Olive-green straw, or brown water repellent fabric
Used in	CDU-10/B
Quantity per CDU-10/B	48 (per subpack assembly)
Detonator	T77 or XM114
Mine dispenser shipping and storage container CNU-104/E:	
Length	43-1/4 in.
Width	43-1/2 in.
Height	28-3/4 in.
Weight (empty) (approx)	200 lb
Weight (loaded) (approx)	650 lb
Logistics:	
Quantity-distance class	7
Storage compatibility group	A
DOT shipping class	A
DOT shipping designation	Explosive Mines
Coast Guard classification	X-B

DISPENSER AND MINE, AIRCRAFT: SUU-41B/A LOADED WITH MINE CANISTERS CDU-14/B

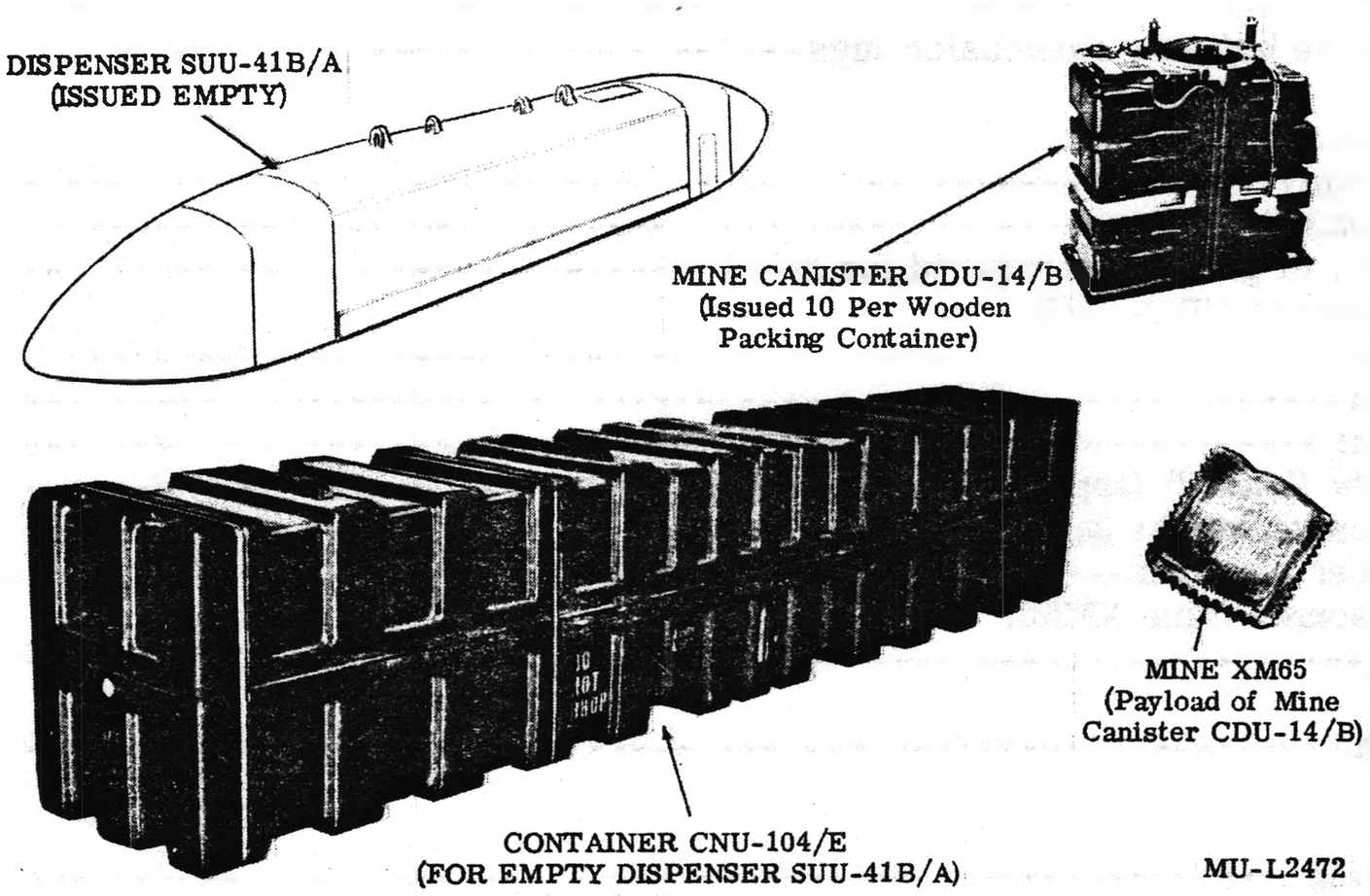

Federal Item Identification	FSN
DISPENSER AND MINE, AIRCRAFT: SUU-41B/A (Loaded)	None
DISPENSER, MINE: SUU-41B/A (Empty)	Not Available
CANISTER, MINE: CDU-14/B (Kit of 10)	1345-809-3236
MINE, ANTIPERSONNEL: XM65	None
SHIPPING AND STORAGE CONTAINER, MINE DISPENSER: CNU-104/E	8140-089-5888

GENERAL

The SUU-41B/A consists of a reuseable dispenser loaded with 1,470 mines XM65. The dispenser contains 10 bays, each bay holding one mine canister CDU-14/B with 147 mines. It is designed to adapt to aircraft F4C. The dispenser is designed to release various combinations of canisters depending on the control panel mode selected with the actuation of an electrical circuit from the cockpit of the aircraft in either a manual or ripple mode.

The mine is an antipersonnel type mine that is housed in olive-green,straw, or brown-colored fabric with no markings. Their shape is rectangular, 2 3/4 inch by 3 inch, and about 3/4-inch thick. They weight approximately 2 1/4 ounces. They consist of an explosive mix, a fiberboard stiffener, and two plastic subpacks, all contained within a double-layer, water repellent, fabric housing.

Mine canisters (10 to a container) are shipped and stored in a wooden box along with 10 pressure cartridge assemblies and dispenser mounting hardware. The dispenser is available separately. The system :s assembled by using personnel.

CHARACTERISTICS

Mine dispenser SUU-41B/A:	
Length	141. 50 in.
Width	15. 30 in.
Height	16. 50 in.
Distance between suspension lugs	30 in. or 14 in., as applicable
Weight (approx):	
Empty	230 lb
Loaded	690 lb
Center of gravity (measured for nose)	71 in.
Mine canister CDU-14/B:	
Length	14. 5 in.
Width	6 5/16 in.
Height	15 in.
Weight (loaded) (approx)	45 lb
Explosive weight (approx)	3. 35 lb
Number of mines	147
Antipersonnel mine XM65:	
Size	2 3/4 in. x 3 in. x 3/4 in.
Weight	2. 3 ounces (65 grams) (wet)
Housing	Olive-green, straw, or brown water repellent fabric
RDX	7. 1 grams
Lead Azide	3. 2 grams
Silica	0. 72 grams
Used in	CDU-4/B, CDU-14/B
Quantity per CDU-14/B	147
Mine dispenser shipping and storage container CNU-104/E:	
Length	43-1/8 in.
Width	36-1/2 in.
Height	24-1/4 in.
Weight (empty) (approx)	200 lb
Weight (loaded) (approx)	660 lb
Logisitics:	
Quantity-distance class	7
Storage compatibility group	A
DOT shipping class	A
DOT shipping designation	Explosive Mines
Coast Guard classification	X-B

REFERENCES: TM 9-1345-204-50
TO 11A9-10-7

ADAPTER, BOMB CLUSTER: ADU-253A/B

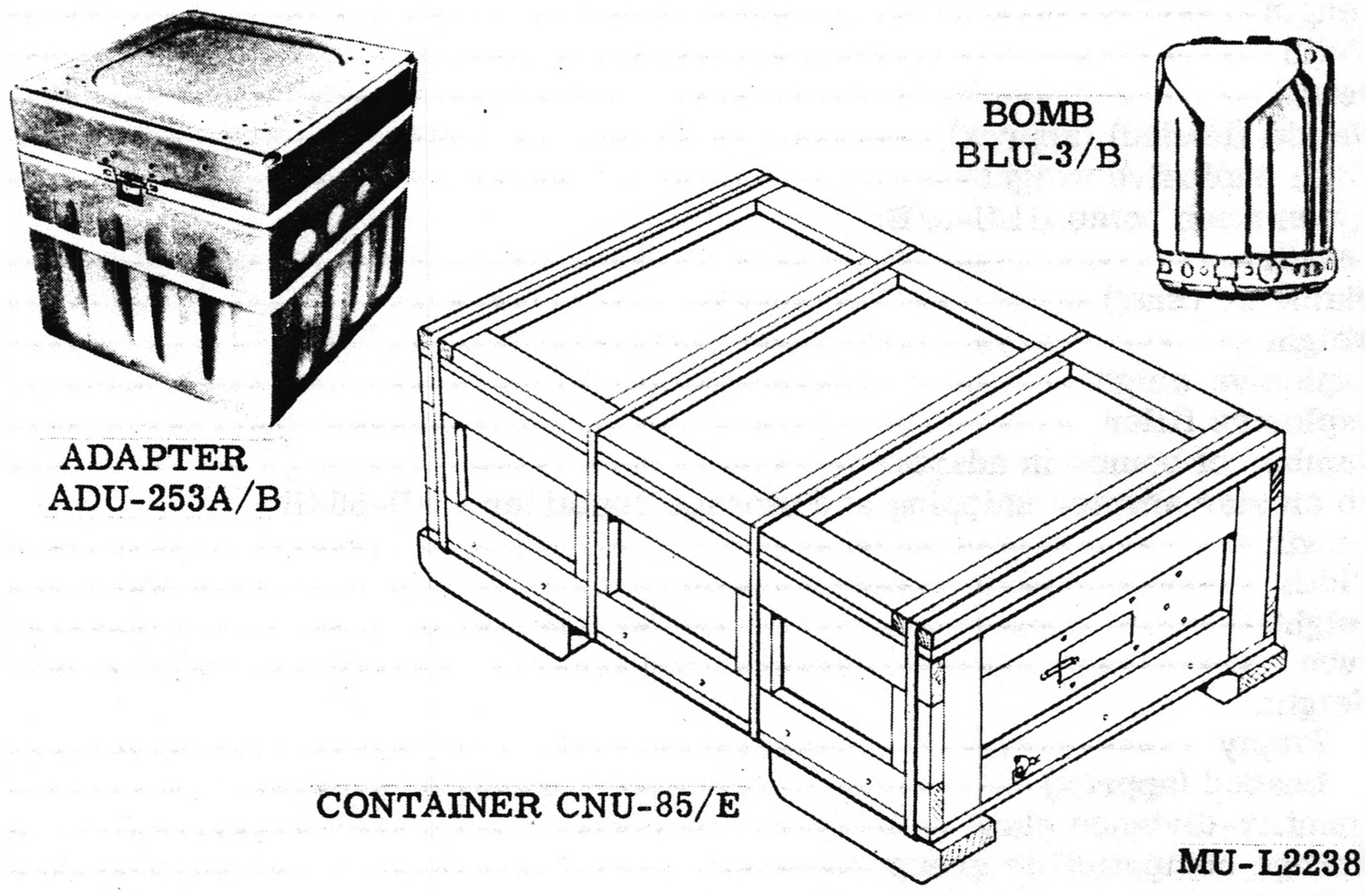

Federal Item Identification	FSN
ADAPTER, BOMB CLUSTER: ADU-253A/B	1325-930-6157
BOMB, FRAGMENTATION: BLU-3/B	1325-429-2972
SHIPPING AND STORAGE CONTAINER, ADAPTER, BOMB CLUSTER: CNU-85/E	8140-900-8385

GENERAL

The bomb cluster adapter ADU-253A/B is an aluminum container loaded with 74 fragmentation bombs BLU-3/B. The adapter is cube-shaped with a panel mounted on the front. It is held together by a steel restraining band and has a steel safety band. A mechanical timer, installed on the front panel of the adapter, links the restraining band. The time can be set to release the restraining band at a predetermined time after release from the B47 or B52 aircraft.

The fragmentation bomb BLU-3/B is a small, antimateriel bomb that detonates upon impact with surfaces such as water, mud, soft earth, or any harder surfaces. Upon detonation, the bomb discharges steel balls at high velocity in a radial pattern. When the bomb is released from the adapter, air-pressure lifts off the spring tab which releases the safety strap holding the vanes together. The vanes then spring outward, stabilizing and orienting the bomb in its fall and arming the high-explosive portion of the bomb. Impact detonates the high-explosive filler which bursts the bomb case and drives the steel balls outward.

The shipping and storage container CNU-85/E holds six bomb cluster adapters in cartons. All six cartons are inclosed within one heat-sealed, moisture-proof barrier bag. The barrier bag is equipped with a humidity indicator plug and a vent. Four steel bands encompass the container for reinforcement. An inspection port on one end of the cover is provided to afford personnel a means of viewing the humidity indicator on the barrier bag.

CHARACTERISTICS

Bomb cluster adapter ADU-253A/B:	
Length	14-3/8 in.
Width	14-3/8 in.
Height	13-1/2 in.
Weight (loaded) (approx)	137 lb
Total explosive weight	26 lb
Fragmentation bomb BLU-3/B:	
Length	3.75 in.
Diameter (max)	2.75 in.
Weight	1.73 lb
Explosive weight	0.352 lb
Explosive filler	Cyclotol
Number of bombs in adapter	74
Bomb cluster adapter shipping and storage container CNU-85/E:	
Length	60-5/8 in.
Width	40-3/8 in.
Height	20-11/16 in.
Cube	29 cu ft
Weight:	
Empty	200 lb
Loaded (approx)	1,032 lb
Quantity-distance class	7
Storage compatibility group	G
DOT shipping class	A
DOT shipping designation	Explosive bomb
Coast Guard classification	VII

REFERENCES: TM 9-1325-207-15/1/TO 11A1-5-15-2

ADAPTER, BOMB CLUSTER: ADU-253/B

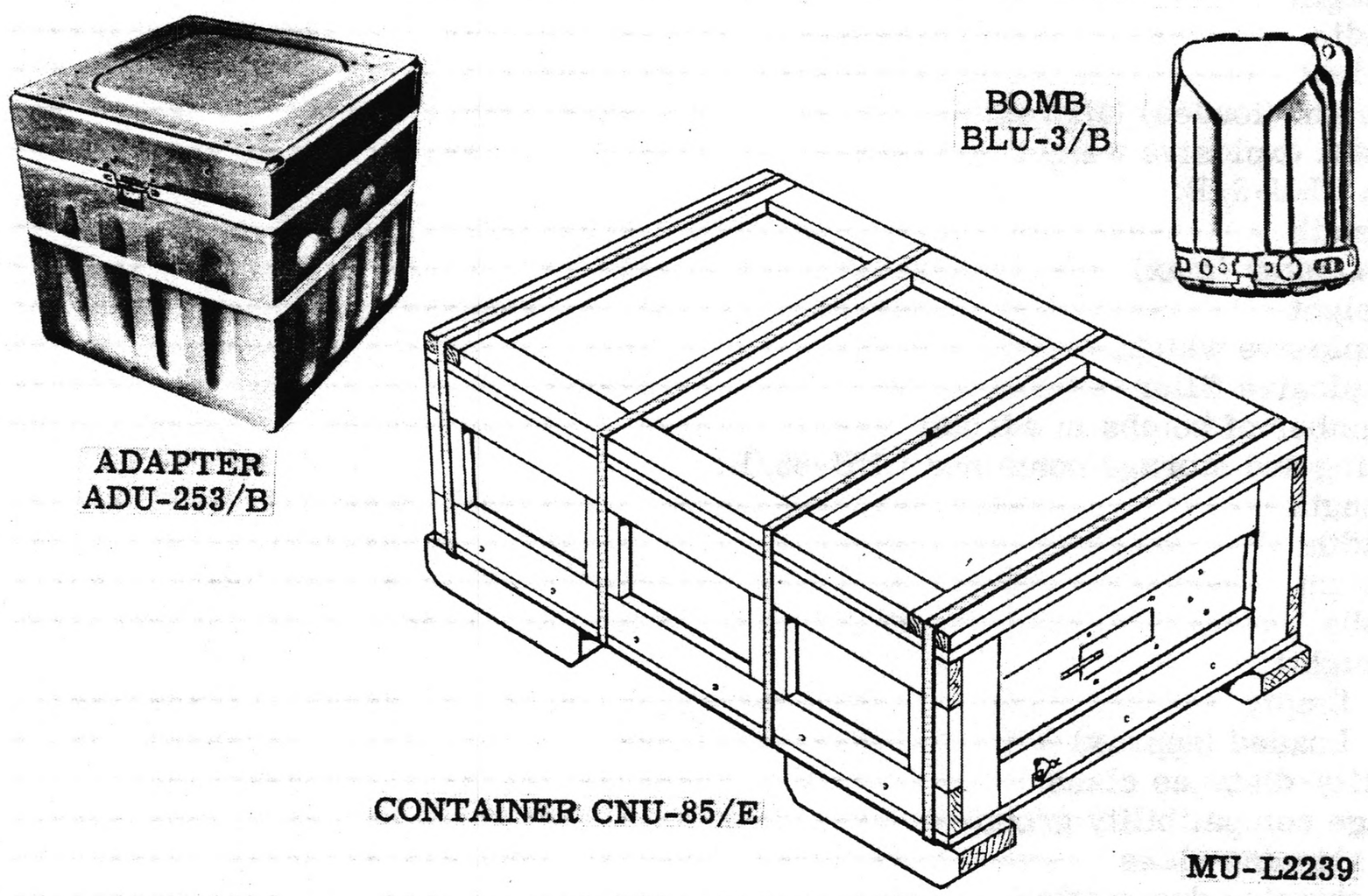

Federal Item Identification	FSN
ADAPTER, BOMB CLUSTER: ADU-253/B	1325-900-8412
BOMB, FRAGMENTATION: BLU-3/B	1325-429-2972
SHIPPING AND STORAGE CONTAINER, ADAPTER, BOMB CLUSTER: CNU-85/E	8140-900-8385

GENERAL

The cluster bomb adapter ADU-253/B is an aluminum container loaded with 74 fragmentation bombs BLU-3/B. It is cube-shaped and held together by a steel restraining band and a steel safety band. A mechanical timer, installed on the front of the adapter, links the restraining band. The timer can be set to release the restraining band at a predetermined time after release from B47 or B52 aircraft.

The fragmentation bomb BLU-3/B is a small, antimateriel bomb that detonates upon impact with surfaces such as water, mud, soft earth, or any harder surfaces. Upon detonation, the bomb discharges steel balls at high velocity in a radial pattern. When the bomb is released from the adapter, air-pressure lifts off the spring tab which releases the safety strap holding the vanes together. The vanes then spring outward, stabilizing and orienting the bomb in its fall and arming the high-explosive portion of the bomb. Impact detonates the high-explosive filler which bursts the bomb case and drives the steel balls outward.

The shipping and storage container CNU-85/E holds six cluster bomb adapters. All six cartons are inclosed within one heat-sealed, moisture-proof barrier bag. The barrier bag is equipped with a humidity indicator plug and a vent. Four steel bands encompass the container for reinforcement. An inspection port on one end of the cover is provided to afford personnel a means of viewing the humidity indicator on the barrier bag.

CHARACTERISTICS

Cluster bomb adapter ADU-253/B:	
Length	14-3/8 in.
Width	14-3/8 in.
Height	13-1/2 in.
Weight (loaded) (approx)	137 lb
Total explosive weight	26 lb
Bomb BLU-3/B:	
Length	3.75 in.
Diameter (max)	2.75 in.
Weight	1.73 lb
Explosive weight	0.352 lb
Explosive filler	Cyclotol
Number of bombs in adapter	74
Shipping and storage container CNU-85/E:	
Length	60 5/8 in.
Width	40 3/8 in.
Height	20 11/16 in.
Cube	29 cu ft
Weight:	
Empty	200 lb
Loaded (approx)	1,032 lb
Quantity-distance class	7
Storage compatibility group	G
DOT shipping class	A
DOT shipping designation	Explosive Bomb
Coast Guard classification	VII

REFERENCES: TM 9-1325-207-15/1/TO 11A1-5-15-2

ADAPTER, BOMB CLUSTER: ADU-253B/B

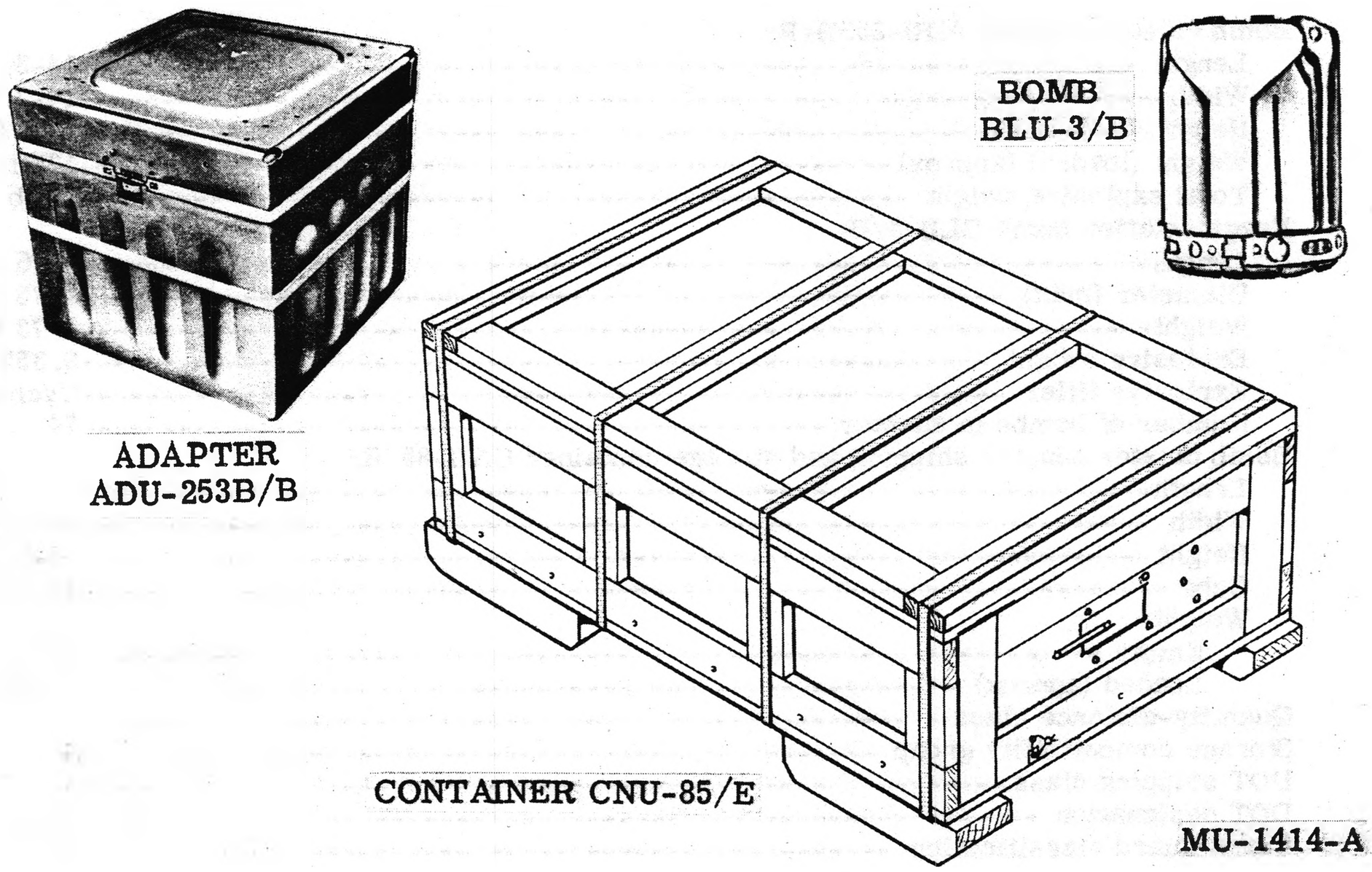

Federal Item Identification	FSN
ADAPTER, BOMB CLUSTER: ADU-253B/B	1325-133-8213
BOMB, FRAGMENTATION: BLU-3/B	1325-429-2972
SHIPPING AND STORAGE CONTAINER, ADAPTER, BOMB CLUSTER: CNU-85/E	8140-900-8385

GENERAL

The bomb cluster adapter ADU-253B/B is an aluminum container loaded with 74 fragmentation bombs BLU-3/B. The adapter is cube-shaped with a panel mounted on the front. It is held together by a steel restraining band and has a steel safety band. A mechanical timer, installed on the front panel of the adapter, links the restraining band. The timer can be set to release the restraining band at a predetermined time after release from the B47 or B52 aircraft.

The fragmentation bomb BLU-3/B is a small, antimateriel bomb that detonates upon impact with surfaces such as water, mud, soft earth, or any harder surfaces. Upon detonation, the bomb discharges steel balls at high velocity in a radial pattern. When the bomb is released from the adapter, air-pressure lifts off the spring tab which releases the safety strap holding the vanes together. The vanes then spring outward, stabilizing and orienting the bomb in its fall and arming the high-explosive portion of the bomb. Impact detonates the high-explosive filler which bursts the bomb case and drives the steel balls outward.

The shipping and storage container CNU-85/E holds six bomb cluster adapters in cartons. All six cartons are inclosed within one heat-sealed, moisture-proof barrier bag. The barrier bag is equipped with a plug humidity indicator and a vent. Four steel bands encompass the container for reinforcement. An inspection port on one end of the cover is provided to afford personnel a means of viewing the humidity indicator on the barrier bag.

CHARACTERISTICS

Bomb cluster adapter ADU-253B/B:	
Length	14-3/8 in.
Width	14-3/8 in.
Height	13-1/2 in.
Weight (loaded) (approx)	137 lb
Total explosive weight	26 lb
Fragmentation bomb BLU-3/B:	
Length	3.75 in.
Diameter (max)	2.75 in.
Weight	1.73 lb
Explosive weight	0.352 lb
Explosive filler	Cyclotol
Number of bombs in adapter	74
Bomb cluster adapter shipping and storage container CNU-85/E:	
Length	60-5/8 in.
Width	40-3/8 in.
Height	20-11/16 in.
Cube	29 cu ft
Weight:	
Empty	200 lb
Loaded (approx)	1,032 lb
Quantity-distance class	7
Storage compatibility group	G
DOT shipping class	A
DOT designation	Explosive Bomb
Coast Guard classification	VII

REFERENCES: TM 9-1325-207-15/1/TO 11A1-5-15-2.

ADAPTER, BOMB CLUSTER: ADU-256A/B

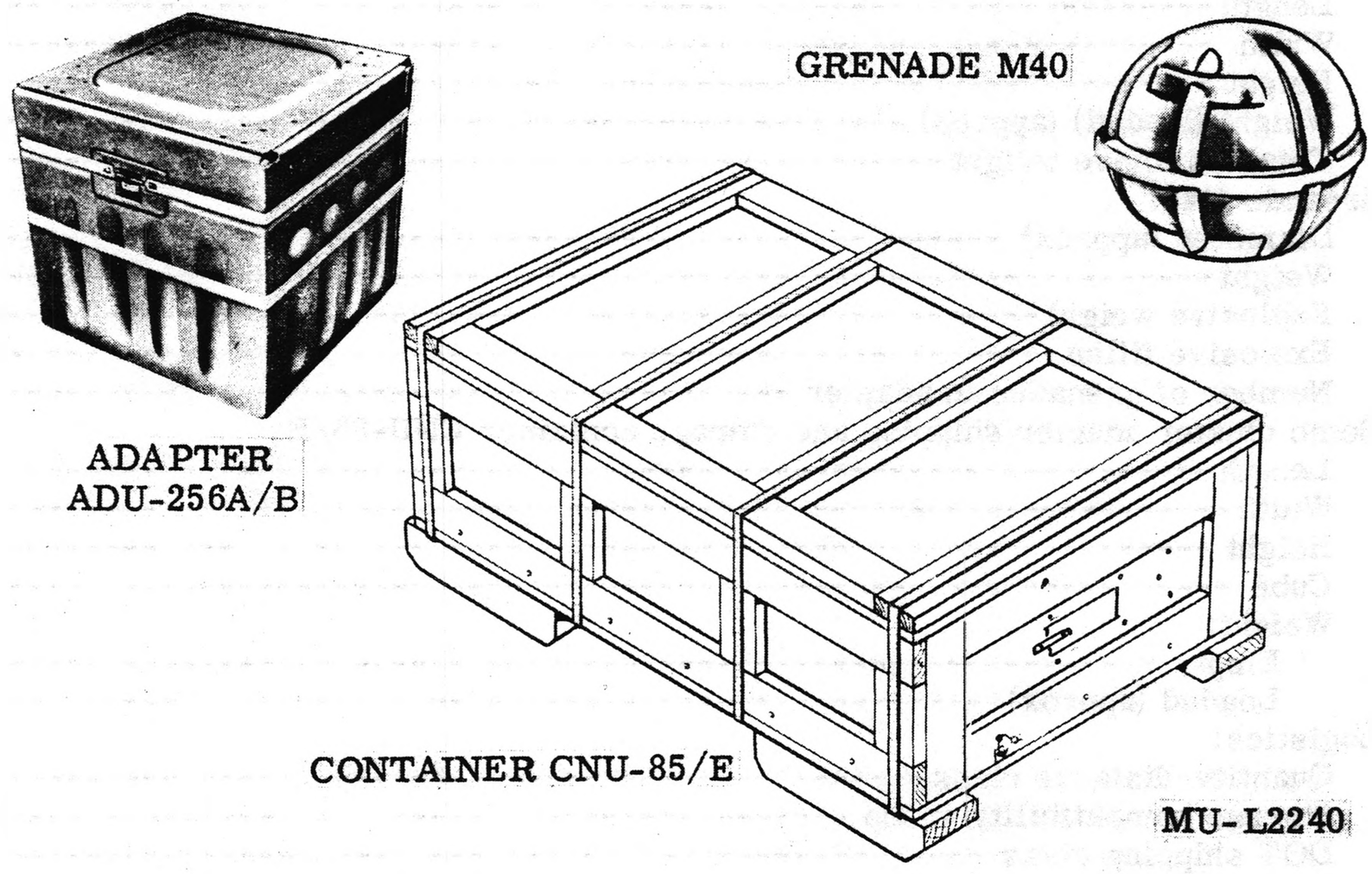

Federal Item Identification	FSN
ADAPTER, BOMB CLUSTER: ADU-256A/B	1325-930-6158
GRENADE M40	None
SHIPPING AND STORAGE CONTAINER, ADAPTER, BOMB CLUSTER: CNU-85/E	8140-900-8385

GENERAL

The bomb cluster adapter ADU-256A/B is an aluminum container loaded with 535 grenades M40. The adapter is cube-shaped with a panel mounted on the front. It is held together by a steel restraining band and has a steel safety band. A mechanical timer, installed on the front panel of the adapter links the restraining band. The timer can be set to release the restraining band at a predetermined time after release from the B47 or B52 aircraft.

The antipersonnel grenade M40 detonates upon impact with surfaces such as water, mud, soft earth, or any harder surfaces, and breaks into fragments which are propelled in all directions. When released, the grenade flutes produce a high rate of spin when the grenade enters the air stream. This spinning produces dispersion and arms the grenade fuze.

The shipping and storage container CNU-85/E holds six bomb cluster adapters in cartons. All six cartons are inclosed within one heat-sealed, moisture-proof barrier bag. The barrier bag is equipped with a humidity indicator plug and a vent. Four steel bands encompass the container for reinforcement. An inspection port at one end of the cover is provided to afford personnel a means of viewing the humidity indicator on the barrier bag.

CHARACTERISTICS

Bomb cluster adapter ADU-256A/B:	
Length	14.375 in.
Width	14.375 in.
Height	13.50 in.
Weight (loaded) (approx)	168 lb
Total explosive weight	30.4 lb
Greande M40:	
Diameter (approx)	1.7 in.
Weight	0.3 lb
Explosive weight	0.058 lb
Explosive filler	Comp B
Number of grenades in adapter	535
Bomb cluster adapter shipping and storage container CNU-85/E:	
Length	60-5/8 in.
Width	40-3/8 in.
Height	20-11/16 in.
Cube	29 cu ft
Weight:	
Empty	200 lb
Loaded (approx)	1,208 lb
Logistics:	
Quantity-distance class	7
Storage compatibility group	A
DOT shipping class	A
DOT shipping designation	Explosive Bomb
Coast Guard classification	VII

REFERENCES: TM 9-1325-207-15/1/TO 11A1-5-15-2
TM 9-1325-207-15/2/TO 11A1-5-15-2/A

ADAPTER, BOMB CLUSTER: ADU-256/B

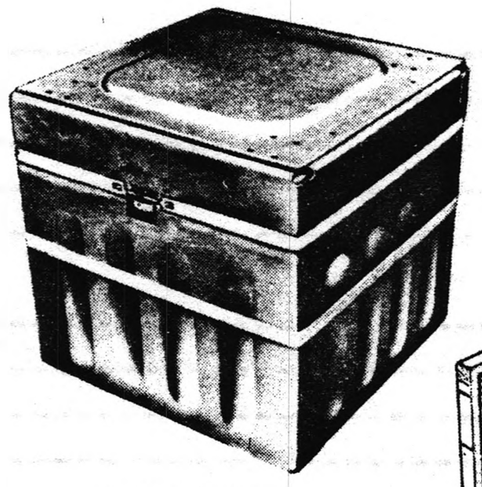

ADAPTER
ADU-256/B

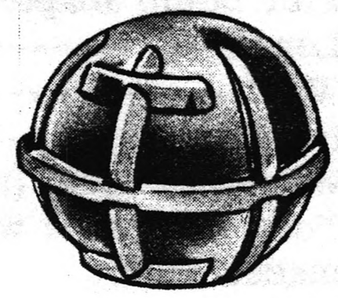

GRENADE M40

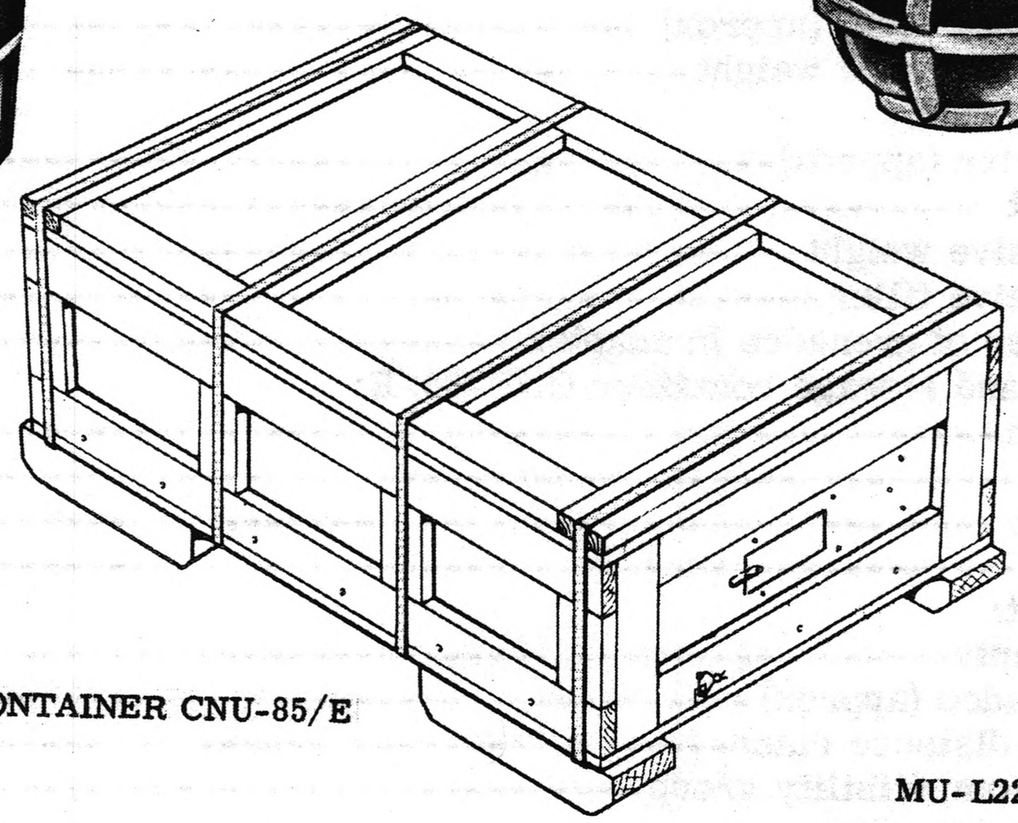

CONTAINER CNU-85/E

MU-L2241

Federal Item Identification	FSN
ADAPTER, BOMB CLUSTER: ADU-256/B	1325-903-0519
GRENADE M40	None
SHIPPING AND STORAGE CONTAINER, ADAPTER, BOMB CLUSTER: CNU-85/E	8140-900-8385

GENERAL

The cluster bomb adapter ADU-256/B is an aluminum container loaded with 535 grenades M40. It is cube-shaped and held together by a steel restraining band and a steel safety band. A mechanical timer, installed on the front of the adapter, links the restraining band. The timer can be set to release the restraining band at a predetermined time after release from B47 or B52 aircraft.

The antipersonnel grenade M40 detonates upon impact with surfaces such as water, mud, soft earth, or any harder surfaces, and breaks into fragments which are propelled in all directions. When released, the grenade flutes produce a high rate of spin when the grenade enters the airstream. This spinning produces dispersion and initiates arming of the grenade fuze.

The shipping and storage container CNU-85/E holds six cluster bomb adapters. All six cartons are closed within one heat-sealed, moisture-proof barrier bag. The barrier bag is equipped with a plug humidity indicator and a vent. Four steel bands encompass the container for reinforcement. An inspection port on one end of the cover is provided to afford personnel a means of viewing the humidity indicator on the barrier bag.

CHARACTERISTICS

Cluster bomb adapter ADU-256/B:	
Length	14.375 in.
Width	14.375 in.
Height	13.50 in.
Weight (loaded) (approx)	168 lb
Total explosive weight	30.4 lb
Grenades M40:	
Diameter (approx)	1.7 in.
Weight	0.3 lb
Explosive weight	0.058 lb
Explosive filler	Comp B
Number of grenades in adapter	535
Shipping and storage container CNU-85/E:	
Length	60 5/8 in.
Width	40 3/8 in.
Height	20 11/16 in.
Cube	29 cu ft
Weight:	
Empty	200 lb
Loaded (approx)	1,208 lb
Quantity-distance class	7
Storage compatibility group	A
DOT shipping class	A
DOT shipping designation	Explosive bomb
Coast Guard classification	VII

REFERENCES: TM 9-1325-207-15/1/TO 11A1-5-15-2
TM 9-1325-207-15/2/TO 11A1-5-15-2/A

ADAPTER, BOMB CLUSTER: ADU-256B/B

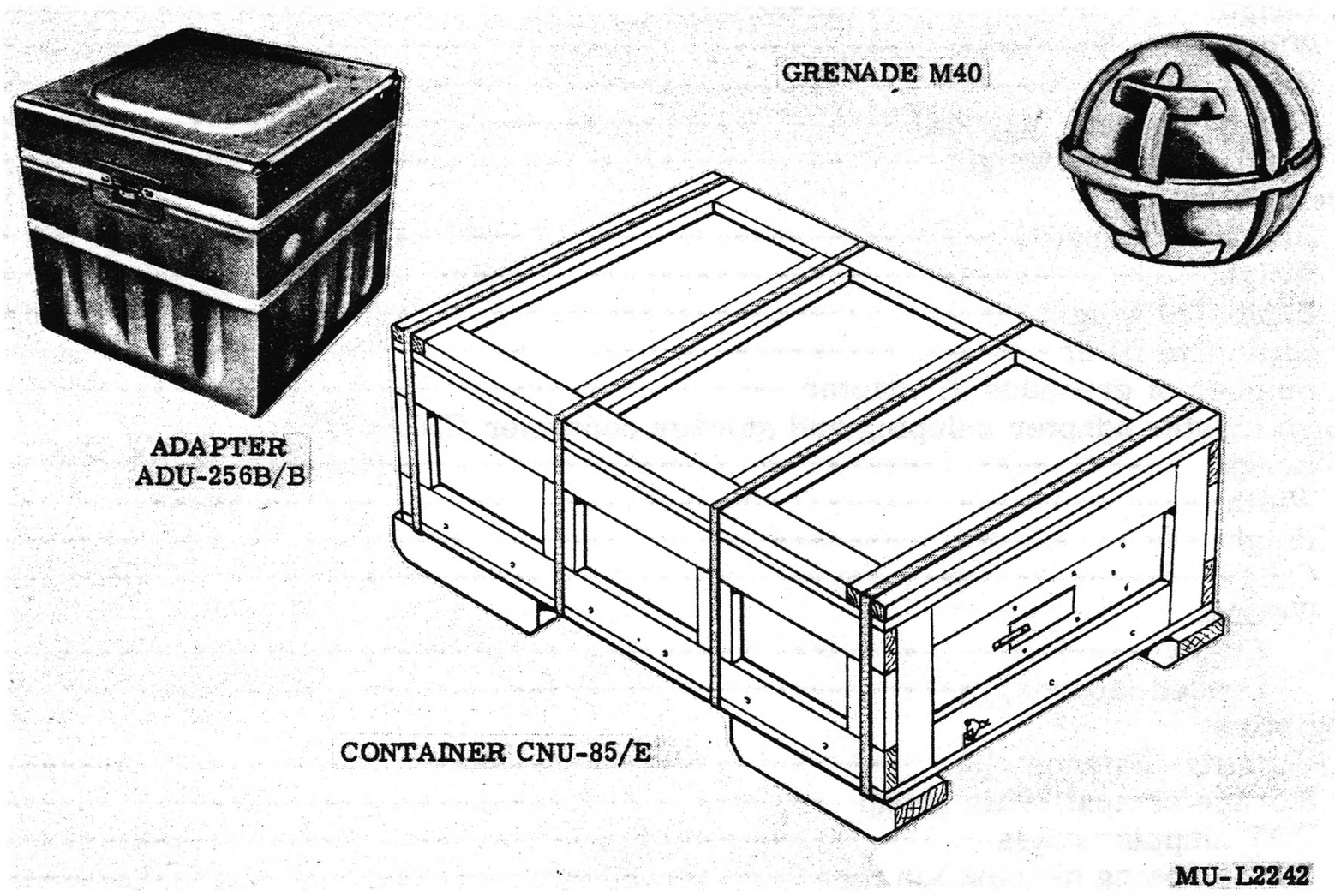

Federal Item Identification	FSN
ADAPTER, BOMB CLUSTER: ADU-256B/B	1325-133-8214
GRENADE M40	None
SHIPPING AND STORAGE CONTAINER, ADAPTER, BOMB CLUSTER: CNU-85/E	8140-900-8385

GENERAL

The bomb cluster adapter ADU-256B/B is an aluminum container loaded with 535 grenades M40. The adapter is cube-shaped with a panel mounted on the front. It is held together by a steel restraining band and has a steel safety band. A mechanical timer, installed on the front panel of the adapter links the restraining band. The timer can be set to release the restraining band at a predetermined time after release from the B47 or B52 aircraft.

The antipersonnel grenade M40 detonates upon impact with surfaces such as water, mud, soft earth, or any harder surfaces, and breaks into fragments which are propelled in all directions. When released, the grenade flutes produce a high rate of spin when the grenade enters the air stream. This spinning produces dispersion and arms the grenade fuze.

The shipping and storage container CNU-85/E holds six bomb cluster adapters in cartons. All six cartons are inclosed within one heat-sealed, moisture-proof barrier bag. The barrier bag is equipped with a humidity indicator plug and a vent. Four steel bands encompass the container for reinforcement. An inspection port at one end of the cover is provided to afford personnel a means of viewing the humidity indicator on the barrier bag.

CHARACTERISTICS

Bomb cluster adapter ADU-256B/B:	
Length	14.375 in.
Width	14.375 in.
Height	13.50 in.
Weight (loaded) (approx)	168 lb
Total explosive weight	30.4 lb
Grenade M40:	
Diameter (approx)	1.7 in.
Weight	0.3 lb
Explosive weight	0.058 lb
Explosive filler	Comp B
Number of grenades in adapter	535
Bomb cluster adapter shipping and storage container CNU-85/E:	
Length	60-5/8 in.
Width	40-3/8 in.
Height	20-11/16 in.
Cube	29 cu ft
Weight:	
Empty	200 lb
Loaded (approx)	1,208 lb
Logistics:	
Quantity-distance class	7
Storage compatibility group	A
DOT shipping class	A
DOT shipping designation	Explosive Bomb
Coast Guard classification	VII

REFERENCES: TM 9-1325-207-15/1/TO 11A1-5-15-2
TM 9-1325-207-15/2/TO 11A1-5-15-2/A

ADAPTER, BOMB CLUSTER: ADU-272A/B

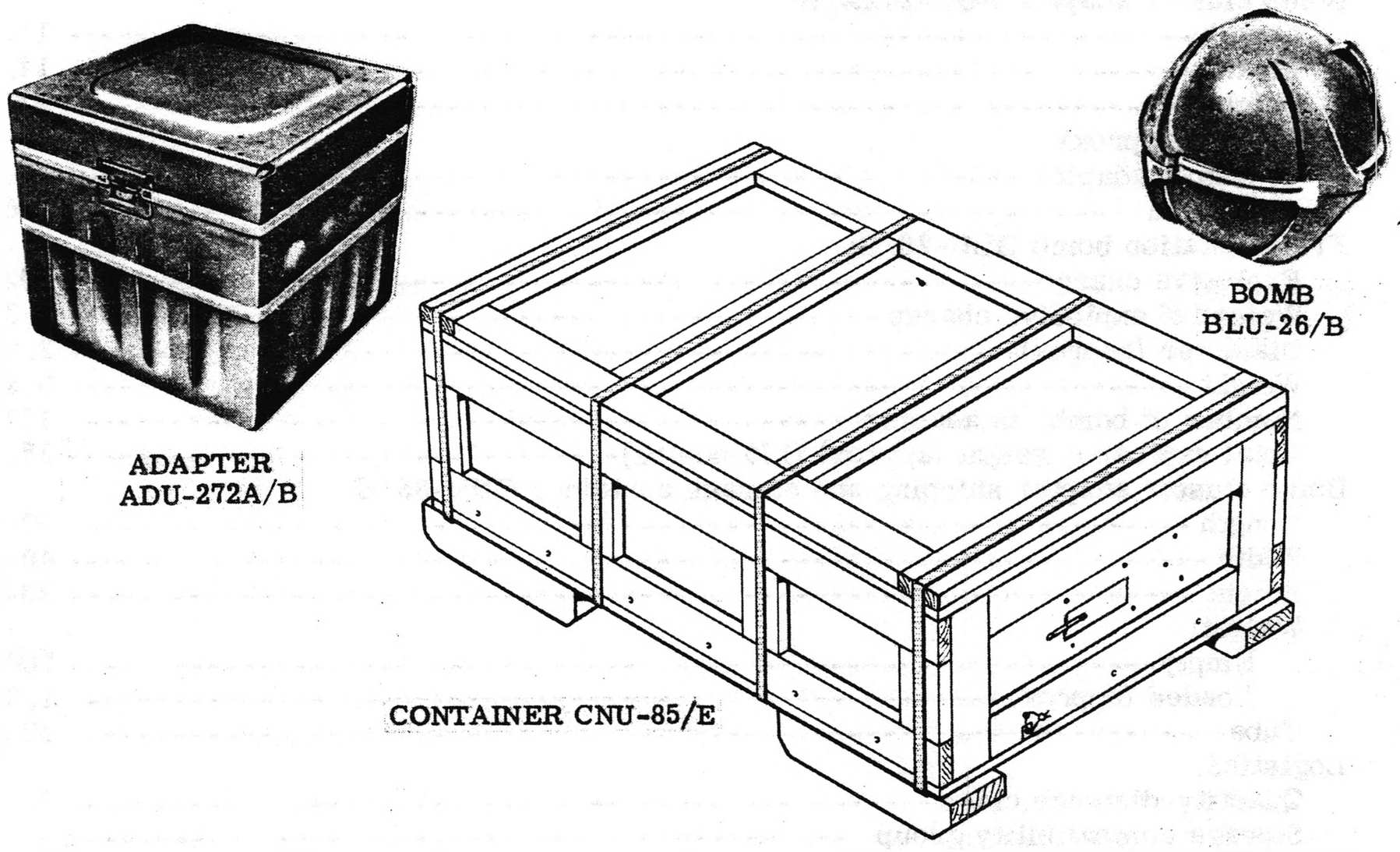

MU-L2243

Federal Item Identification	FSN
ADAPTER, BOMB CLUSTER: ADU-272A/B	1325-930-6159
BOMB, FRAGMENTATION: BLU-26/B	1325-916-2227
SHIPPING AND STORAGE CONTAINER, ADAPTER, BOMB CLUSTER: CNU-85/E	8140-900-8385

GENERAL

The bomb cluster adapter ADU-272A/B is an aluminum container loaded with approximately 177 fragmentation bombs BLU-26/B. The adapter is cube-shaped with a panel mounted on the front. It is held together by a steel restraining band and has a steel safety band. A mechanical timer, installed on the front panel of the adapter, links the restraining band. The timer can be set to release the restraining band at a predetermined time after release from the B47 or B52 aircraft.

The bomb BLU-26/B is an antimateriel bomb which detonates upon impact with surfaces such as water, mud, soft earth, or any harder surfaces. Upon detonation, steel balls are propelled at high velocity in a radial direction. The steel balls are effective against such targets as personnel, trucks, parked aircraft, ammunition, fuel tanks, and radar equipment. When each bomb is released from the adapter into the air stream, the bomb flutes produce a high rate of spin. This spinning induces dispersion and arms the bomb fuze. The fuze is sensitive to impact from any direction.

The shipping and storage container CNU-85/E holds six bomb cluster adapters in cartons. All six cartons are inclosed within one heat-sealed, moisture-proof barrier bag. The barrier bag is equipped with a humidity indicator plug and a vent. Four steel bands encompass the container for reinforcement. An inspection port on one end of the cover is provided to afford personnel a means of viewing the humidity indicator on the barrier bag.

CHARACTERISTICS

Bomb cluster adapter ADU-272A/B:	
Length	14.375 in.
Width	14.375 in.
Height	13.50 in.
Weight (approx):	
Empty adapter	10 lb
Loaded	176 lb
Fragmentation bomb BLU-26/B:	
Explosive charge	70/30 cyclotol
Weight of explosive charge	0.2 lb
Diameter (approx)	2.78 in.
Weight	0.95 lb
Number of bombs in adapter	177
Total explosive weight (approx) (175 bombs)	35.7 lb
Bomb cluster adapter shipping and storage container CNU-85/E:	
Length	60-5/8 in.
Width	40-3/8 in.
Height	20-11/16 in.
Weight:	
Empty	200 lb
Loaded (approx)	1,334 lb
Cube	29 cu ft
Logistics:	
Quantity-distance class	7
Storage compatibility group	G
DOT shipping class	A
DOT shipping designation	Explosive bomb
Coast Guard classification	VII

REFERENCES: TM 9-1325-207-15/1/TO 11A1-5-15-2

ADAPTER, BOMB CLUSTER: ADU-272/B

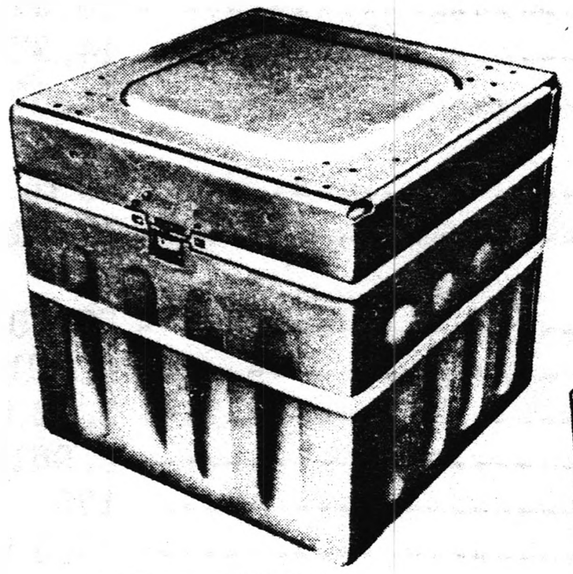

ADAPTER
ADU-272/B

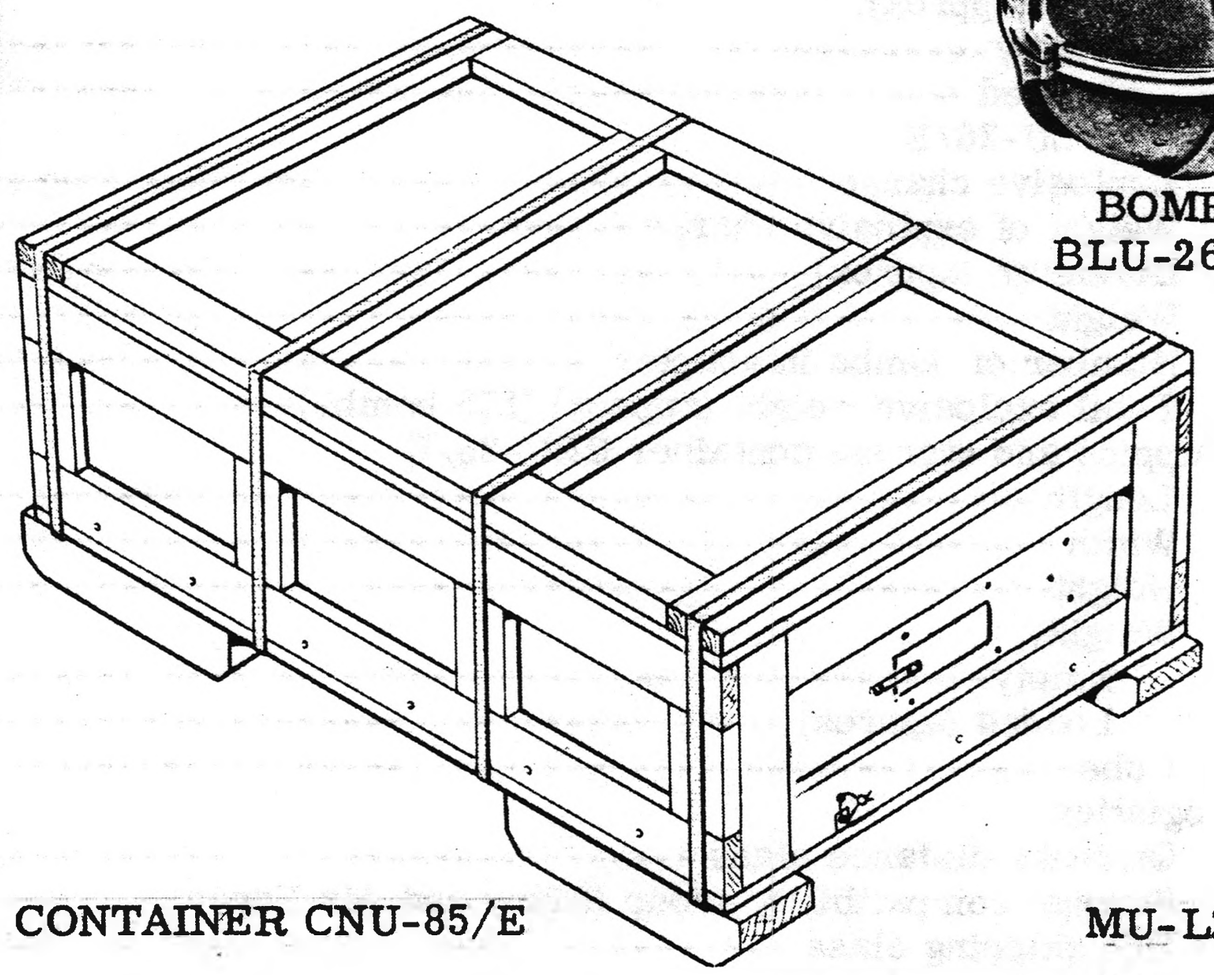

CONTAINER CNU-85/E

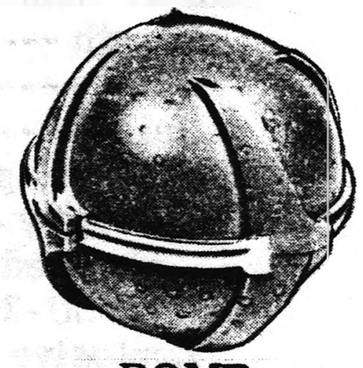

BOMB
BLU-26/B

MU-L2244

Federal Item Identification	FSN
ADAPTER, BOMB CLUSTER: ADU-272/B	1325-921-5637
BOMB, FRAGMENTATION: BLU-26/B	1325-916-2227
SHIPPING AND STORAGE CONTAINER, ADAPTER, BOMB CLUSTER: CNU-85/E	8140-900-8385

GENERAL

The cluster bomb adapter ADU-272/B is an aluminum container loaded with approximately 175 fragmentation bombs BLU-26/B. It is cube-shaped and held together by a steel restraining band and a steel safety band. A mechanical timer, installed on the front of the adapter, links the restraining band. The timer can be set to release the restraining band at a predetermined time after release from B47 or B52 aircraft.

The bomb BLU-26/B is an antimateriel bomb which detonates upon impact with surfaces such as water, mud, or soft earth, or any harder surfaces. Upon detonation, steel balls are propelled at high velocity in a radial direction. The steel balls are effective against such targets as trucks, parked aircraft, ammunition, fuel tanks, and radar equipment. When each bomb is released from the adapter into the air stream, the bomb flutes produce a high rate of spin. This spinning induces dispersion and initiates arming of the bomb fuze. The fuze is sensitive to impact from any direction.

The shipping and storage container CNU-85/E holds six cluster bomb adapters. All six cartons are inclosed within one heat-sealed, moisture-proof barrier bag. The barrier bag is equipped with a plug humidity indicator and a vent. Four steel bands encompass the container for reinforcement. An inspection port on one end of the cover is provided to afford personnel a means of viewing the humidity indicator on the barrier bag.

CHARACTERISTICS

Cluster bomb adapter ADU-272/B:	
Length	14.375 in.
Width	14.375 in.
Height	13.50 in.
Weight (approx):	
Empty	10 lb
Loaded	189 lb
Bomb BLU-26/B:	
Explosive charge	70/30 cyclotol
Weight of explosive charge	0.2 lb
Diameter (approx)	2.92 in.
Weight	0.9616 lb
Number of bombs in adapter	175
Total explosive weight (approx) (175 bombs)	35.3 lb
Shipping and storage container CNU-85/E:	
Length	60 5/8 in.
Width	40 3/8 in.
Height	20 11/16 in.
Weight:	
Empty	200 lb
Loaded (approx)	1,334 lb
Cube	29 cu ft
Logistics:	
Quantity-distance class	7
Storage compatibility group (Army and Air Force)	G
DOT shipping class	A
DOT shipping designation	Explosive Bomb
Coast Guard Classification	VII

REFERENCE: TM 9-1325-207-15/1/TO 11A1-5-15-2

ADAPTER, BOMB CLUSTER: ADU-272B/B

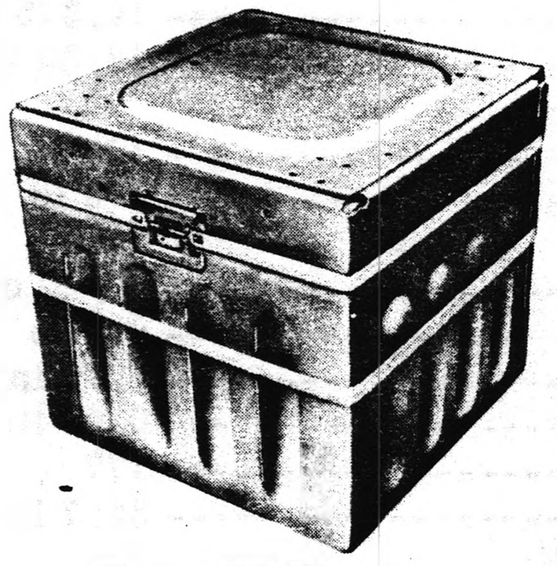

ADAPTER
ADU-272B/B

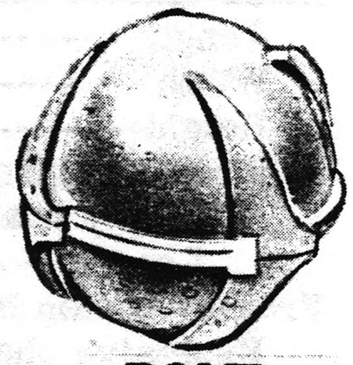

BOMB
BLU-26/B

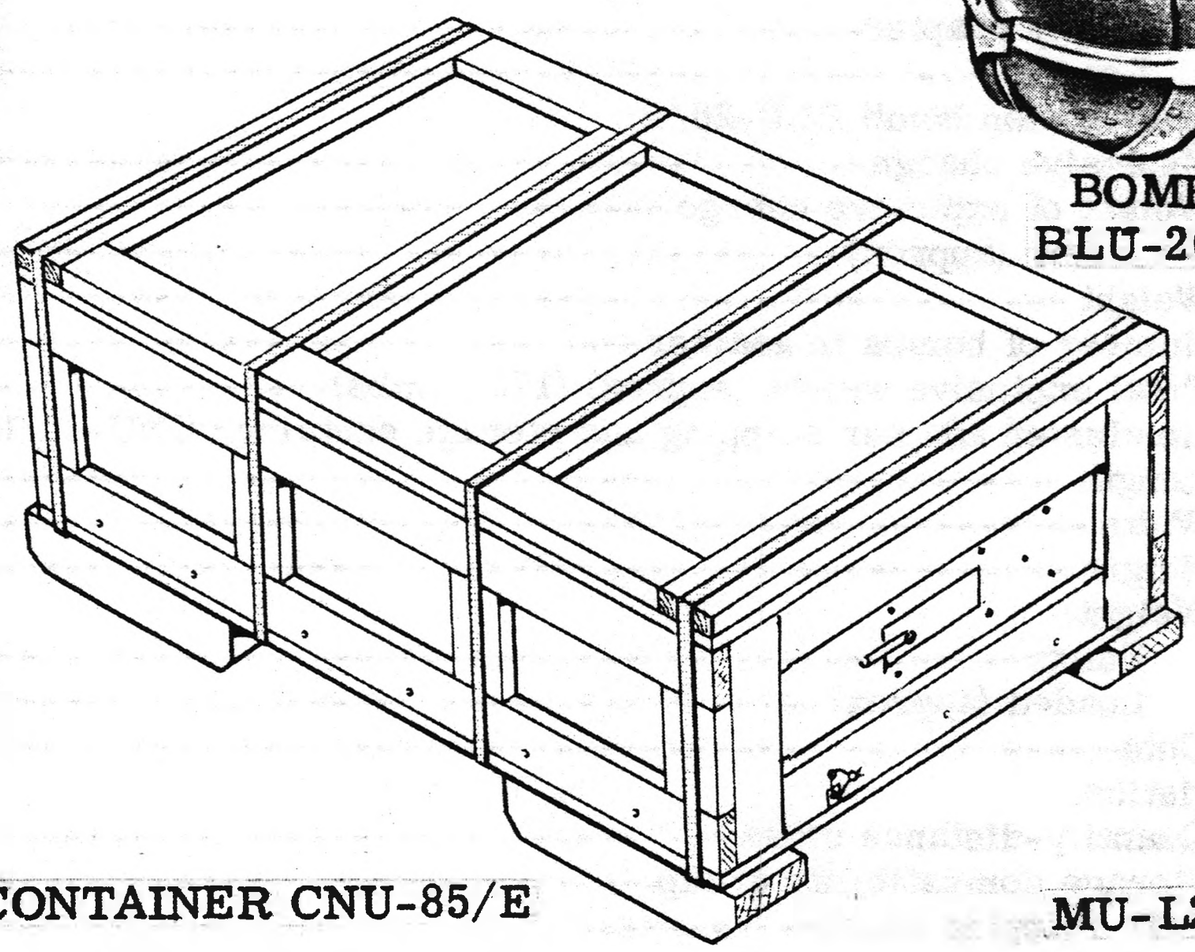

CONTAINER CNU-85/E

MU-L2245

Federal Item Identification	FSN
ADAPTER, BOMB CLUSTER: ADU-272B/B	1325-106-2250
BOMB, FRAGMENTATION: BLU-26/B	1325-916-2227
SHIPPING AND STORAGE CONTAINER, ADAPTER, BOMB CLUSTER: CNU-85/E	8140-900-8385

GENERAL

The bomb cluster adapter ADU-272B/B is an aluminum container loaded with approximately 177 fragmentation bombs BLU-26/B. The adapter is cube-shaped with a panel mounted on the front. It is held together by a steel restraining band and has a steel safety band. A mechanical timer, installed on the front panel of the adapter, links the restraining band. The timer can be set to release the restraining band at a predetermined time after release from the B47 or B52 aircraft.

The bomb BLU-26/B is an antimateriel bomb which detonates upon impact with surfaces such as water, mud, soft earth, or any harder surfaces. Upon detonation, steel balls are propelled at high velocity in a radial direction. The steel balls are effective against such targets as personnel, trucks, parked aircraft, ammunition, fuel tanks, and radar equipment. When each bomb is released from the adapter into the air stream, the bomb flutes produce a high rate of spin. This spinning induces dispersion and arms the bomb fuze. The fuze is sensitive to impact from any direction.

The shipping and storage container CNU-85/E holds six bomb cluster adapters in cartons. All six cartons are inclosed within one heat-sealed, moisture-proof barrier bag. The barrier bag is equipped with a humidity indicator plug and a vent. Four steel bands encompass the container for reinforcement. An inspection port on one end of the cover is provided to afford personnel a means of viewing the humidity indicator on the barrier bag.

CHARACTERISTICS

Bomb cluster adapter ADU-272B/B:	
Length	14.375 in.
Width	14.375 in.
Height	13.50 in.
Weight (approx):	
Empty adapter	10 lb
Loaded	176 lb
Fragmentation bomb BLU-26/B:	
Explosive charge	70/30 cyclotol
Weight of explosive charge	0.2 lb
Diameter (approx)	2.78 in.
Weight	0.95 lb
Number of bombs in adapter	177
Total explosive weight (approx) (175 bombs)	35.7 lb
Bomb cluster adapter shipping and storage container CNU-85/E:	
Length	60-5/8 in.
Width	40-3/8 in.
Height	20-11/16 in.
Weight:	
Empty	200 lb
Loaded (approx)	1,334 lb
Cube	29 cu ft
Logistics:	
Quantity-distance class	7
Storage compatibility group	G
DOT shipping class	A
DOT shipping designation	Explosive bomb
Coast Guard classification	VII

REFERENCES: TM 9-1325-207-15/1/TO 11A1-5-15-2

ADAPTER, BOMB CLUSTER: ADU-285A/B

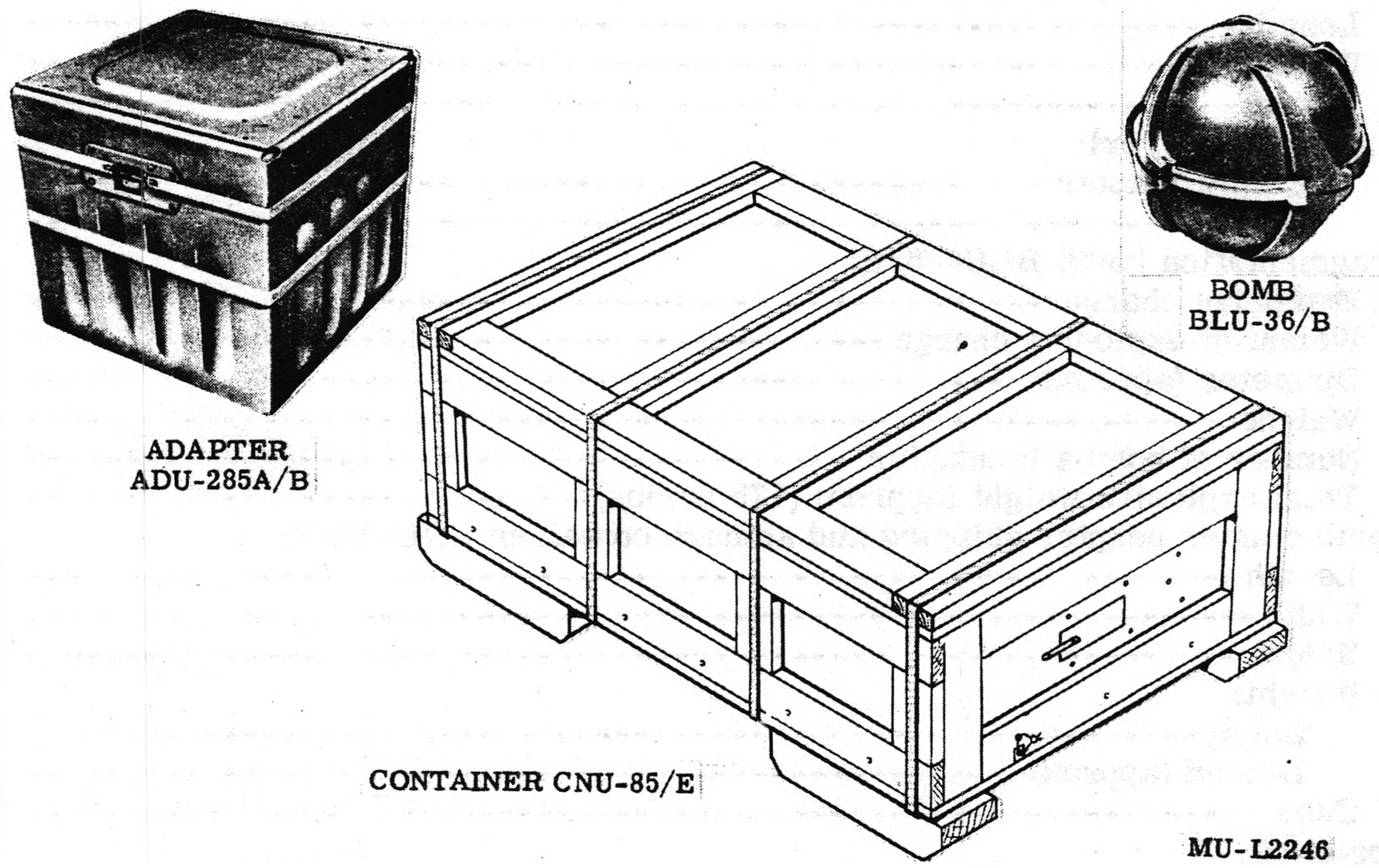

Federal Item Identification	FSN
ADAPTER, BOMB CLUSTER: ADU-285A/B	1325-984-5207
BOMB, FRAGMENTATION: BLU-36/B	1325-933-4957
SHIPPING AND STORAGE CONTAINER, ADAPTER, BOMB CLUSTER: CNU-85/E:	8140-900-8385

GENERAL

The bomb cluster adapter ADU-285A/B is an aluminum container loaded with approximately 177 fragmentation bombs BLU-36/B. The adapter is cube-shaped with a panel mounted on the front. It is held together by a steel restraining band and has a steel safety band. A mechanical timer, installed on the front panel of the adapter, links the restraining band. The timer can be set to release the restraining band at a predetermined time after release from the B47 or B52 aircraft.

The bomb BLU-36/B is a spin-armed, self-dispersing, fragmentation submunition that detonates at the end of a variable delay. Upon detonation, steel balls are propelled at high velocity in a radial direction. The steel balls are effective against such targets as personnel, trucks, parked aircraft, ammunition, fuel tanks, and radar equipment. When each bomb is released from the adapter into the air stream, the bomb flutes produce a high rate of spin. This spinning induces dispersion and initiates arming of the bomb fuze. The fuze functions at the end of a variable delay.

The shipping and storage container CNU-85/E holds six bomb cluster adapters in cartons. All six cartons are enclosed within one heat-sealed moisture-proof barrier bag. The barrier bag is equipped with a humidity indicator plug and a vent. Four steel bands encompass the container for reinforcement. An inspection port on one end of the cover is provided to afford personnel means of viewing the humidity indicator on the barrier bag.

CHARACTERISTICS

Bomb cluster adapter ADU-285A/B:	
Length	14.375 in.
Width	14.375 in.
Height	13.50 in.
Weight (approx):	
Empty adapter	10 lb
Loaded	176 lb
Fragmentation bomb BLU-36/B:	
Explosive charge	70/30 cyclotol
Weight of explosive charge	0.2 lb
Diameter (approx)	2.78 in.
Weight	0.95 lb
Number of bombs in adapter	177
Total explosive weight (approx) (175 bombs)	35.7 lb
Bomb cluster adapter shipping and storage container CNU-85/E:	
Length	60-5/8 in.
Width	40-3/8 in.
Height	20-11/16 in.
Weight:	
Empty	200 lb
Loaded (approx)	1,334 lb
Cube	29 cu ft
Logistics:	
Quantity-distance class	7
Storage compatibility group (Army and Air Force)	G
DOT shipping class	A
DOT shipping designation	Explosive bomb
Coast Guard classification	VII

REFERENCE: TM 9-1325-207-15/1/TO 11A1-5-15-2

ADAPTER, BOMB CLUSTER: ADU-285B/B

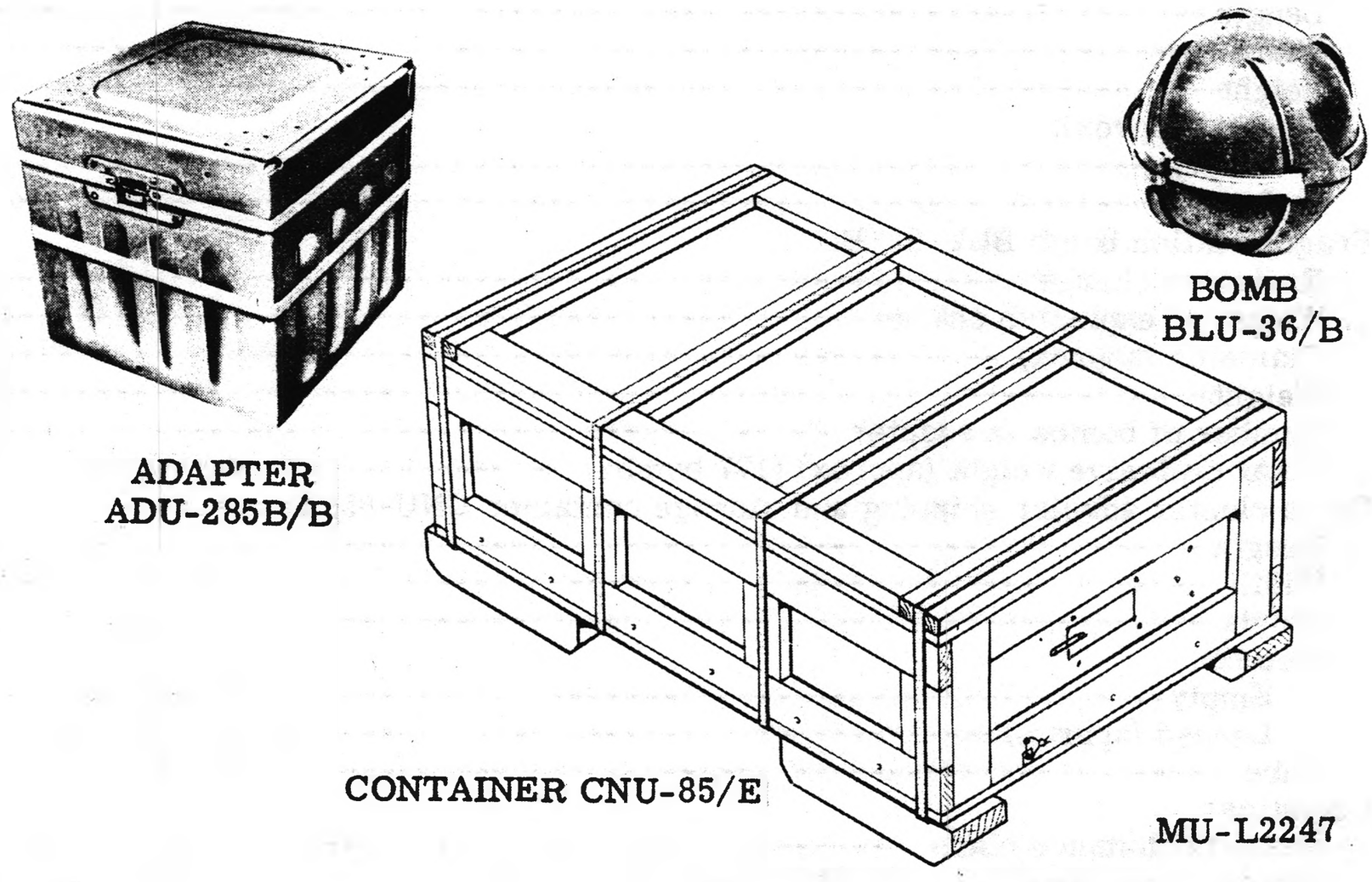

Federal Item Identification	FSN
ADAPTER, BOMB CLUSTER: ADU-285B/B	1325-106-2251
BOMB, FRAGMENTATION: BLU-36/B	1325-933-4957
SHIPPING AND STORAGE CONTAINER, ADAPTER, BOMB CLUSTER: CNU-85/E:	8140-900-8385

GENERAL

The bomb cluster adapter ADU-285B/B is an aluminum container loaded with approximately 177 fragmentation bombs BLU-36/B. The adapter is cube-shaped with a panel mounted on the front. It is held together by a steel restraint band and has a steel safety band. A mechanical timer, installed on the front panel of the adapter, links the restraining band. The timer can be set to release the restraining band at a predetermined time after release from the B47 or B52 aircraft.

The bomb BLU-36/B is a spin-armed, self-dispersing, fragmentation submunition that detonates at the end of a variable delay. Upon detonation, steel balls are propelled at high velocity in a radial direction. The steel balls are effective against such targets as personnel, trucks, parked aircraft, ammunition, fuel tanks, and radar equipment. When each bomb is released from the adapter into the air stream, the bomb flutes produce a high rate of spin. This spinning induces dispersion and initiates arming of the bomb fuze. The fuze functions at the end of a variable delay.

The shipping and storage container CNU-85/E holds six bomb cluster adapters in cartons. All six cartons are enclosed within one heat-sealed, moisture-proof barrier bag. The barrier bag is equipped with a humidity indicator plug and a vent. Four steel bands encompass the container for reinforcement. An inspection port on one end of the cover is provided to afford personnel a means of viewing the humidity indicator on the barrier bag.

CHARACTERISTICS

Bomb cluster adapter ADU-285B/B:	
Length	14.375 in.
Width	14.375 in.
Height	13.50 in.
Weight (approx):	
Empty	10 lb
Loaded	176 lb
Fragmentation bomb BLU-36/B:	
Explosive charge	70/30 cyclotol
Weight of explosive charge	0.2 lb
Diameter (approx)	2.78 in.
Weight	0.95 lb
Number of bombs in adapter	177
Total explosive weight (approx) (177 bombs)	35.7 lb
Bomb cluster adapter shipping and storage container CNU-85/E:	
Length	60-5/8 in.
Width	40-3/8 in.
Height	20-11/16 in.
Weight:	
Empty	200 lb
Loaded (approx)	1,334 lb
Cube	29 cu ft
Logistics:	
Quantity-distance class	7
Storage compatibility group (Army and Air Force)	G
DOT shipping class	A
DOT shipping designation	Explosive Bomb
Coast Guard classification	VII

REFERENCE: TM 9-1325-207-15/1/TO 11A1-5-15-2

CLUSTER BOMB MK15 MOD 0

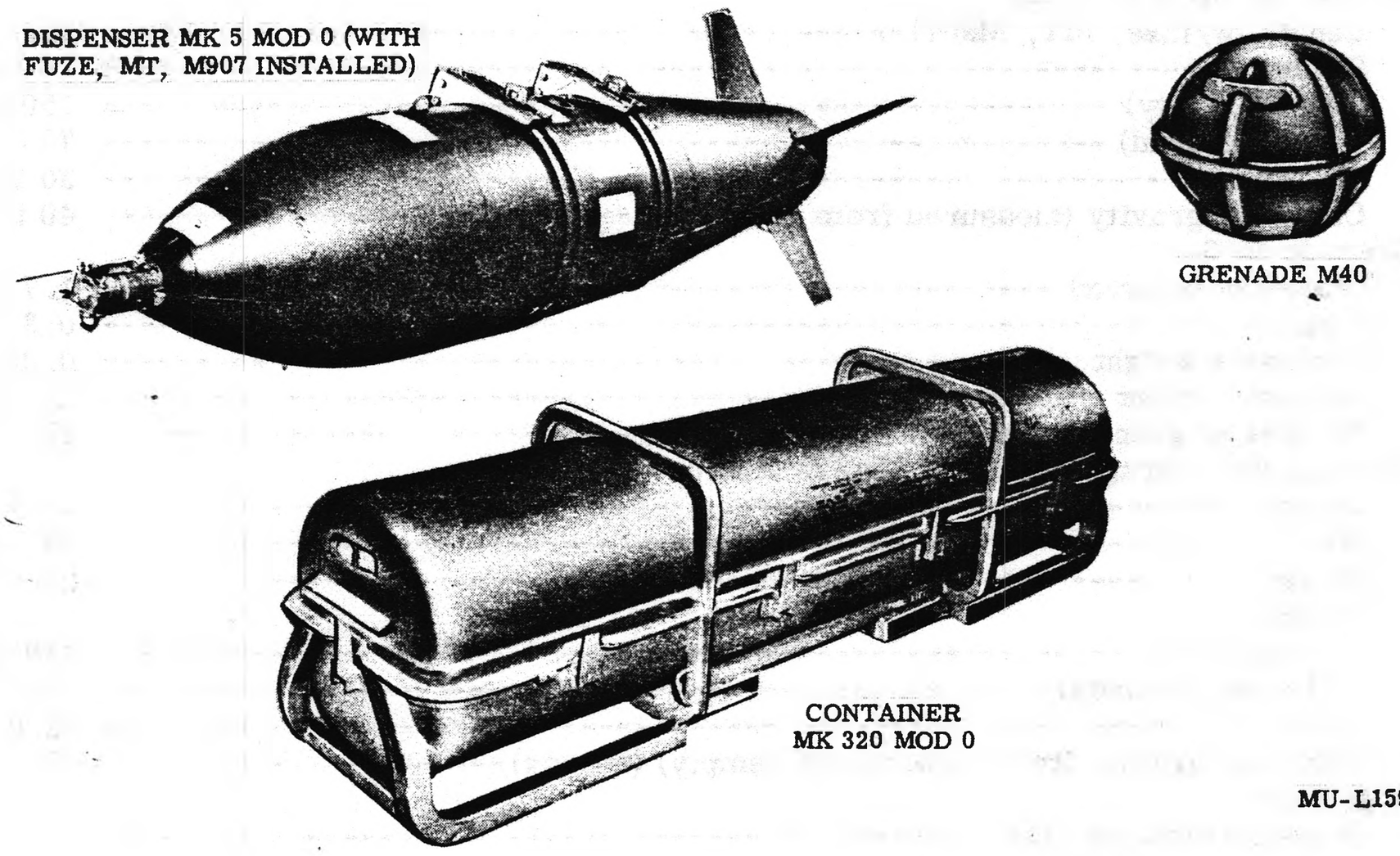

Federal Item Identification	FSN
CLUSTER BOMB MK15 MOD 0	1325-074-0389
UNIVERSAL WEAPON DISPENSER MK5 MOD 0	None
GRENADE M40	None
SHIPPING AND STORAGE CONTAINER MK320 MOD 0	None

GENERAL

The Cluster Bomb MK15 Mod 0 (Sadeye) is a skin-stressed structure with a low-drag, aerodynamic profile, loaded with 2020 grenades M40. It is used to saturate large ellipitical areas several hundred feet in diameter. It is effective in close support against mortar, gun emplacements, and exposed troops. Sadeye can be carried by all modern, high-performance aircraft equipped with standard 14-inch suspension bomb racks. The dispenser is divided in half longitudinally. Two suspension bands, approximately 32.5 and 46.5 inches from the forward end, encircle the two halves. Four fins are attached to the aft end of the dispenser body. Upon release, the suspension bands open automatically and drop free of the dispenser body. Simultaneously, the arming wire is withdrawn, initiating the fuze time delay cycle. When the fuze M907 functions, the fuze booster is ignited and the fuze and nose locking ring are blown forward, unlocking the forward end of the dispenser. Ram air forces, acting on the dispenser, force the two halves apart, hinging them about the end plate. The payload is instantaneously dispensed.

The antipersonnel grenade M40 detonates upon impact with surfaces such as water, mud, soft earth, or any harder surfaces, and breaks into fragments which are propelled in all directions. When released, the grenade flutes produce a high rate of spin when the grenade enters airstream. This spinning produces dispersion and initiates arming of the grenade fuze.

The metal, reusable shipping and storage container MK320 Mod 0, used to ship the weapon dispenser, is held together by 10 clamps.

CHARACTERISTICS

Cluster Bomb MK15 Mod 0:	
Length (w/fuze, MT, M907)	92.3 in.
Diameter	16 in.
Weight (empty)	150 lb
Weight (loaded)	750 lb
Fin span	30 in.
Center of gravity (measured from nose end)	40 in.
Grenade M40:	
Diameter (approx)	1.7 in.
Weight	0.3 lb
Explosive weight	0.058 lb
Explosive filler	Comp B
Number of grenades in bomb	2020
Shipping and storage container MK320 Mod 0:	
Length	95-1/8 in.
Width	23-1/8 in.
Height	24-15/16 in.
Weight:	
Empty	350 lb
Loaded (approx)	1100 lb
Cube	32.0 cu ft
Center of gravity from forward end (empty) (approx)	48 in.
Logistics:	
Quantity-distance class	7
Storage compatibility group	A
DOT shipping class	A
DOT shipping designation	Explosive Bomb
Coast Guard classification	VII
Release altitude	2000 to 10,000 ft
Aircraft speed (max)	500 knots
Saturation pattern	Elliptical, several hundred feet in diameter
Operating temperature	-65 to +160°F
Storage temperature limits	-65 to +160°F

REFERENCES: NAVAIR 11-5A-19

CLUSTER BOMB MK18 MOD 0

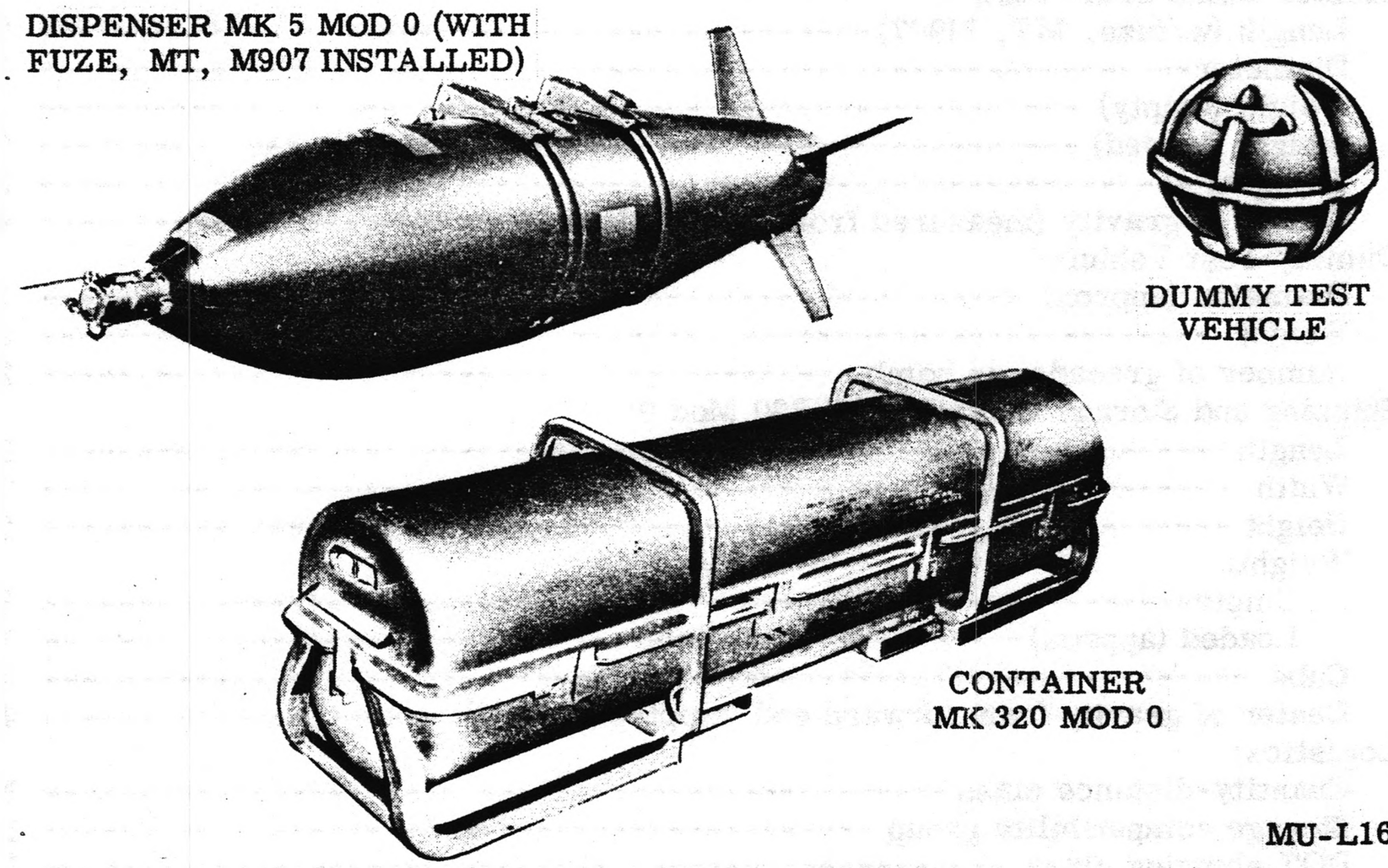

Federal Item Identification	FSN
CLUSTER BOMB MK18 MOD 0	1325-051-3702
UNIVERSAL WEAPON DISPENSER MK5 MOD 0	None
TEST VEHICLE: DUMMY	None
SHIPPING AND STORAGE CONTAINER MK320 MOD 0	None

GENERAL

The cluster bomb MK18 Mod 0 (Sadeye) is a skin-stressed structure with a low-drag, aerodynamic profile, loaded with 2020 dummy test vehicles. It is used to saturate large elliptical areas several hundred feet in diameter. It is used in simulated close support against mortar, gun emplacements, and exposed troops. Sadeye can be carried by all modern high-performance aircraft equipped with standard 14-inch suspension bomb racks. The dispenser is divided in half longitudinally. Two suspension bands, approximately 32.5 and 46.5 inches from the forward end, encircle the two halves. Four fins are attached to the aft end of the dispenser body. Upon release, the suspension bands open automatically and drop free of the dispenser body. Simultaneously, the arming wire is withdrawn, initiating the fuze time delay cycle. When the fuze M907 functions, the fuze booster is ignited and the fuze and nose locking ring are blown forward, unlocking the forward end of the dispenser. Ram air forces, acting on the dispenser, force the two halves apart, hinging them about the end plate. The payload is instantaneously dispensed.

The dummy test vehicle is a completely inert item the same size and weight and having the same aerodynamic characteristics as the antipersonnel grenade M40. When released, the flutes produce a high rate of spin when the grenade enters the airstream. This spinning produces dispersion.

The metal, reusable shipping and storage container MK320 Mod 0, used to ship the weapon dispenser, is held together by 10 clamps.

A total of 215 cluster bombs MK18 Mod 0 have been produced to date. There are no present plan for additonal production.

CHARACTERISTICS

Cluster Bomb MK18 Mod 0:	
Length (w/fuze, MT, M907)	92.3 in.
Diameter	16 in.
Weight (empty)	150 lb
Weight (loaded)	750 lb
Fin span	30 in.
Center of gravity (measured from nose end)	40 in.
Dummy Test Vehicle:	
Diameter (approx)	1.7 in.
Weight	0.3 lb
Number of grenades in bomb	2020
Shipping and Storage Container MK320 Mod 0:	
Length	95-1/8 in.
Width	23-1/8 in.
Height	24-15/16 in.
Weight:	
Empty	350 lb
Loaded (approx)	1100 lb
Cube	32.0 cu ft
Center of gravity from forward end (empty) (approx)	48 in.
Logistics:	
Quantity-distance class	N/A
Storage compatibility group	N/A
DOT shipping class	N/A
DOT shipping designation	N/A
Release altitude	2000 to 10,000 ft
Aircraft speed (max)	500 knots
Saturation pattern	Elliptical, several hundred feet in diameter
Operating temperature	-65 to + 160°F
Storage temperature limits	-65 to + 160°F

CLUSTER BOMB MK19 MOD 0

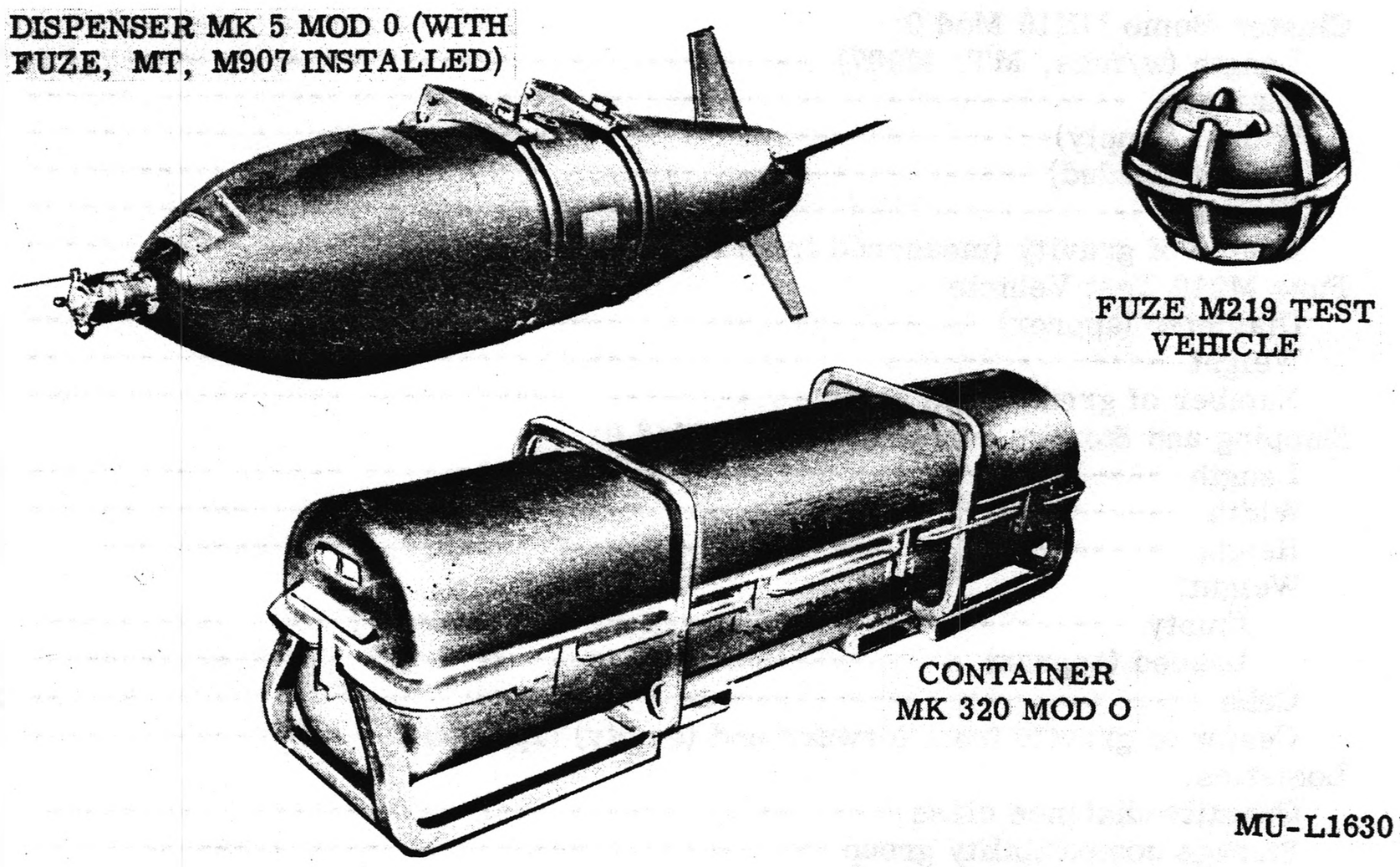

Federal Item Identification	FSN
CLUSTER BOMB MK19MOD 0	1325-051-3701
UNIVERSAL WEAPON DISPENSER MK5 MOD 0	None
TEST VEHICLE, FUZE M219	None
SHIPPING AND STORAGE CONTAINER MK320 MOD 0	None

GENERAL

The cluster bomb MK19 Mod 0 (Sadeye) is a skin-stessed structure with a low-drag, aerodynamic profile, loaded with 2020 test vehicles. It is used to saturate large elliptical areas several hundred feet in diameter. It is used in simulated close support against mortar, gun emplacements, and exposed troops. Sadeye can be carried by all modern high-performance aircraft equipped with standard 14-inch suspension bomb racks. The dispenser is divided in half longitudinally. Two suspension bands, approximately 32.5 and 46.5 inches from the forward end, encircle the two halves. Four fins are attached to the aft end of the dispenser body. Upon release, the suspension bands open automatically and drop free of the dispenser body. Simultaneously, the arming wire is withdrawn, initiating the fuze time delay cycle. When the fuze M907 functions, the fuze booster is ignited and the fuze and nose locking ring are blown forward, unlocking the forward end of the dispenser. Ram air forces, acting on the dispenser, force the two halves apart, hinging them about the end plate. The payload is instantaneously dispensed.

The test vehicle is an inert shell and filler combination with a live, spin arming, impact detonating fuze M219 incased. It is the same size and weight and has the same aerodynamic characteristics as the antipersonnel grenade M40. When released, the grenade flutes produce a high rate of spin when the grenade enters the airstream. This spinning produces dispersion and initiates arming of the fuze M219.

The metal, reusable shipping and storage container MK320 Mod 0, used to ship the weapon dispenser, is held together by 10 clamps.

A total of 40 cluster bombs MK19 Mod 0 have been produced to date. There are no present plans for additional production.

CHARACTERISTICS

Cluster Bomb MK19 Mod 0:	
Length (w/fuze, MT, M907)	92.3 in.
Diameter	16 in.
Weight (empty)	150 lb
Weight (loaded)	750 lb
Fin span	30 in.
Center of gravity (measured from nose end)	40 in.
Fuze M219 Test Vehicle:	
Diameter (approx)	1.7 in.
Weight	0.3 lb
Number of grenades in bomb	2020
Shipping and Storage container MK320 Mod 0:	
Length	95-1/8 in.
Width	23-1/8 in.
Height	24-15/16 in.
Weight:	
Empty	350 lb
Loaded (approx)	1100 lb
Cube	32.0 cu ft
Center of gravity from forward end (empty) (approx)	48 in.
Logistics:	
Quantity-distance class	1
Storage compatibility group	B, E, or N
DOT shipping class	C
DOT shipping designation	Fuze, detonating class C explosive handle carefully
Coast Guard classification	III
Release altitude	2000 to 10,000 ft
Aircraft speed (max)	500 knots
Saturation pattern	Elliptical, several hundred feet in diameter
Operating temperature	-65 to +160°F
Storage temperature limits	-65 to +160°F

CLUSTER BOMB MK21 MOD 0

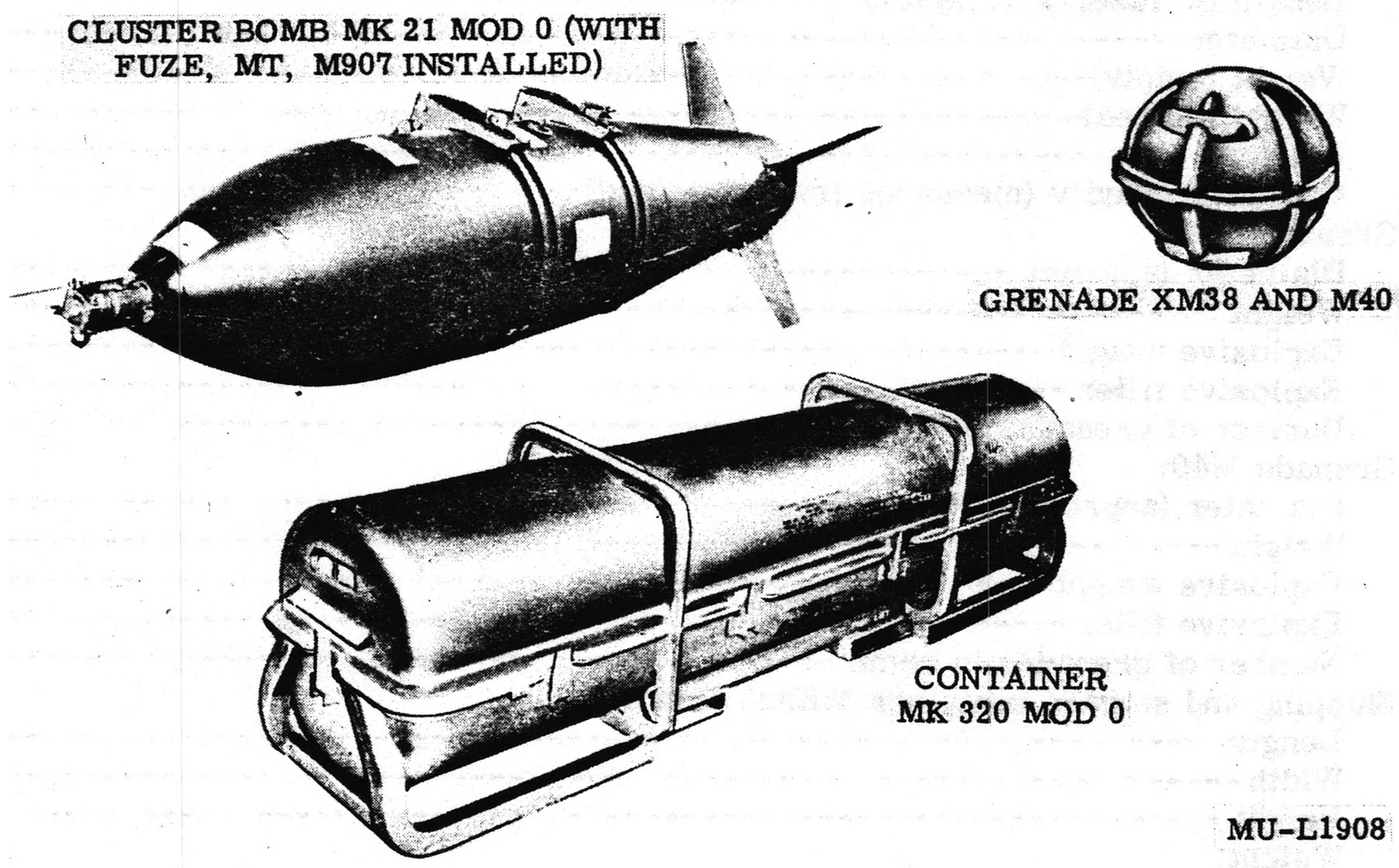

Federal Item Identification	FSN
CLUSTER BOMB MK21 MOD 0	1325-933-3322
UNIVERSAL WEAPON DISPENSER MK5 MOD 0	None
GRENADE M38	None
GRENADE M40	None
SHIPPING AND STORAGE CONTAINER MK320 MOD 0	None

GENERAL

The cluster bomb MK21 Mod 0 (Sadeye) is a skin-stressed structure with a low-drag, aerodynamic profile, loaded with 1515 grenades M38 and 505 grenades M40. It is used to saturate large elliptical areas several hundred feet in diameter. It is effective in close support against mortar, gun emplacements, and exposed troops. Sadeye can be carried by all modern high-performance aircraft equipped with standard 14-inch suspension bomb racks. The dispenser is divided in half longitudinally. Two suspension bands, approximately 32.5 and 46.5 inches from the forward end, encircle the two halves. Four fins are attached to the aft end of the dispenser body. Upon release, the suspension bands open automatically and drop free of the dispenser body. Simultaneously, the arming wire is withdrawn, initiating the fuze time delay cycle. When the fuze M907 functions, the fuze booster is ignited and the fuze and nose locking ring are blown forward, unlocking the forward end of the dispenser. Ram air forces, acting on the dispenser, force the two halves apart, hinging them about the end plate. The payload is instantaneously dispensed.

The antipersonnel grenade M38 detonates at the end of a random time delay, and breaks into fragments which are propelled in all directions. When released, the grenade flutes produce a high rate of spin when the grenade enters the airstream. This spinning produces dispersion and initiates arming of the grenade fuze.

The antipersonnel grenade M40 has the same characteristics as the grenade M38 except that it detonates upon impact with surfaces such as water, mud, soft earth, or any harder surface.

The metal, reusable shipping and storage container MK320 Mod 0, used to ship the weapon dispenser, is held together by 10 clamps.

CHARACTERISTICS

Cluster Bomb MK21 Mod 0:	
Length (w/fuze, MT, M907)	92.3 in.
Diameter	16 in.
Weight (empty)	150 lb
Weight (loaded)	750 lb
Fin span	30 in.
Center of gravity (measured from nose end)	40 in.
Grenade M38:	
Diameter (approx)	1.7 in.
Weight	0.3 lb
Explosive weight	0.058 lb
Explosive filler	Comp B
Number of grenades in bomb	1515
Grenade M40:	
Diameter (approx)	1.7 in.
Weight	0.3 lb
Explosive weight	0.058 lb
Explosive filler	Comp B
Number of grenades in bomb	505
Shipping and storage container MK320 Mod 0:	
Length	95-1/8 in.
Width	23-1/8 in.
Height	24-15/16 in.
Weight:	
Empty	350 lb
Loaded (approx)	1100 lb
Cube	32.0 cu ft
Center of gravity from forward end (empty) (approx)	48 in.
Logistics:	
Quantity-distance class	7
Storage compatibility group	A
DOT shipping class	A
DOT shipping designation	Explosive Bomb
Coast Guard classification	VII
Release altitude	2000 to 10,000 ft
Aircraft speed (max)	500 knots
Saturation pattern	Elliptical, several hundred feet in diameter
Operating temperature	-65 to + 160°F
Storage temperature limits	-65 to + 160°F

REFERENCES: NAVAIR 11-5A-19

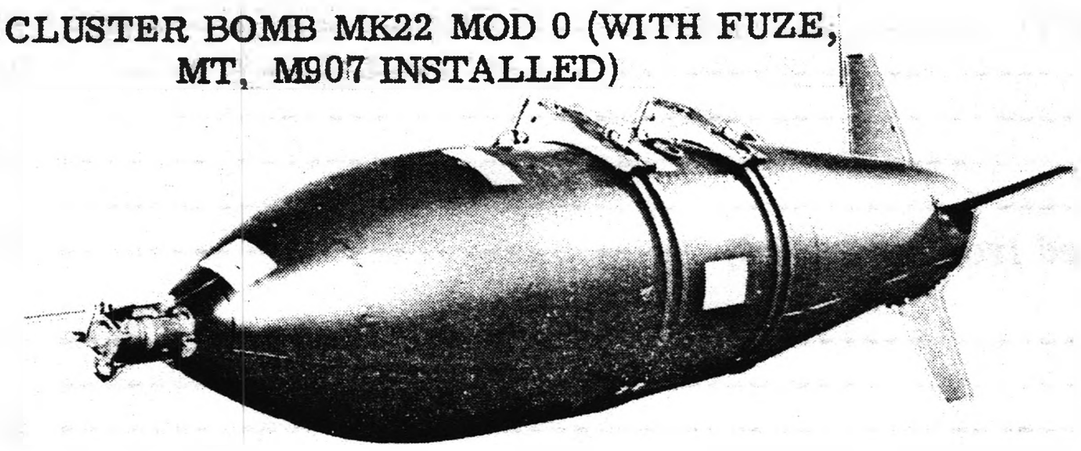

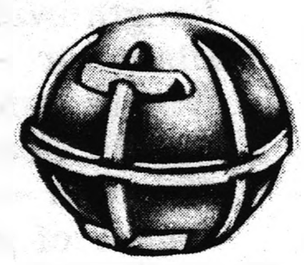

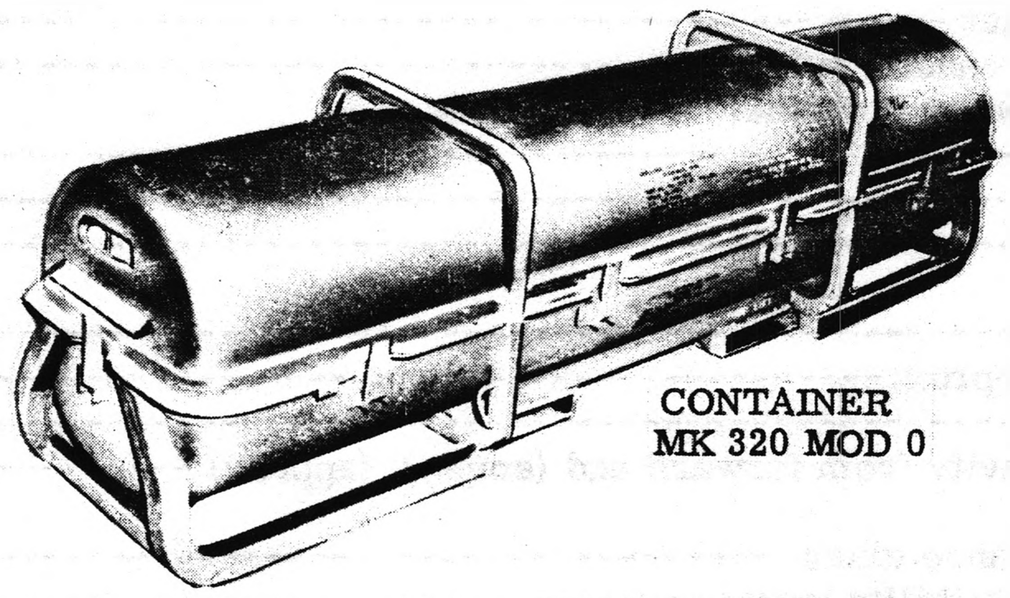

MU-L1909

Federal Item Identification	FSN
CLUSTER BOMB MK22 MOD 0	1325-933-3323
UNIVERSAL WEAPON DISPENSER MK5 MOD 0	None
GRENADE M38	None
SHIPPING AND STORAGE CONTAINER MK320 MOD 0	None

GENERAL

The cluster bomb MK22 Mod 0 (Sadeye) is a skin-stressed structure with a low-drag, aerodynamic profile, loaded with 2020 grenades M38. It is used to saturate large elliptical areas several hundred feet in diameter. It is effective in close support against mortar, gun emplacements, and exposed troops. Sadeye can be carried by all modern high-performance aircraft equipped with standard 14-inch suspension bomb racks. The dispenser is divided in half longitudinally. Two suspension bands, approximately 32.5 and 46.5 inches from the forward end, encircle the two halves. Four fins are attached to the aft end of the dispenser body. Upon release, the suspension bands open automatically and drop free of the dispenser body. Simultaneously, the arming wire is withdrawn, initiating the fuze time delay cycle. When the fuze M907 functions, the fuze booster is ignited and the fuze and nose locking ring are blown forward, unlocking the forward end of the dispenser. Ram air forces, acting on the dispenser, force the two halves apart, hinging them about the end plate. The payload is instantaneously dispensed.

The antipersonnel grenade M38 detonates at the end of a random time delay, and breaks into fragments which are propelled in all directions. When released, the grenade flutes produce a high rate of spin when the grenade enters the airstream. This spinning produces dispersion and initiates arming of the grenade fuze.

The metal, reusable shipping and storage container MK320 Mod 0, used to ship the weapon dispenser, is held together by 10 clamps.

CHARACTERISTICS

Cluster Bomb MK22 Mod 0:	
Length (with fuze, MT M907)	92.3 in.
Diameter	16 in.
Weight (empty)	150 lb
Weight (loaded)	750 lb
Fin span	30 in.
Center of gravity (measured from nose end)	40 in.
Grenade M38:	
Diameter (approx)	1.7 in.
Weight	0.3 lb
Explosive weight	0.058 lb
Explosive filler	Comp B
Number of grenades in bomb	2020
Shipping and storage container MK320 Mod 0:	
Length	95-1/8 in.
Width	23-1/8 in.
Height	24-15/16 in.
Weight:	
Empty	350 lb
Loaded (approx)	1100 lb
Cube	32.0 cu ft
Center of gravity from forward end (empty) (approx)	48 in.
Logistics:	
Quantity-distance class	7
Storage compatibility group	A
DOT shipping class	A
DOT shipping designation	Explosive Bomb
Coast Guard classification	VII
Release altitude	2000 to 10,000 ft
Aircraft speed (max)	500 knots
Saturation pattern	Elliptical, several hundred feet in diameter
Operating temperature	-65 to + 160°F
Storage temperature limits	-65 to + 160°F

REFERENCES: NAVAIR 11-5A-19

RELOAD KIT: CBU-42/A

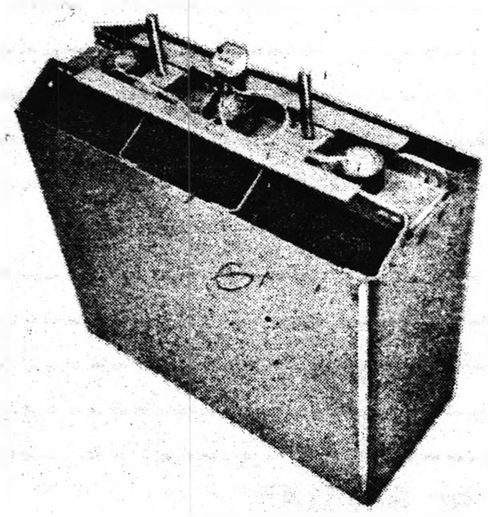

MINE CLUSTER,
ANTIPERSONNEL
CDU-20/B

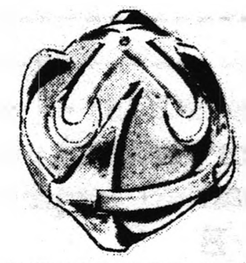

MINE BLU-54/B

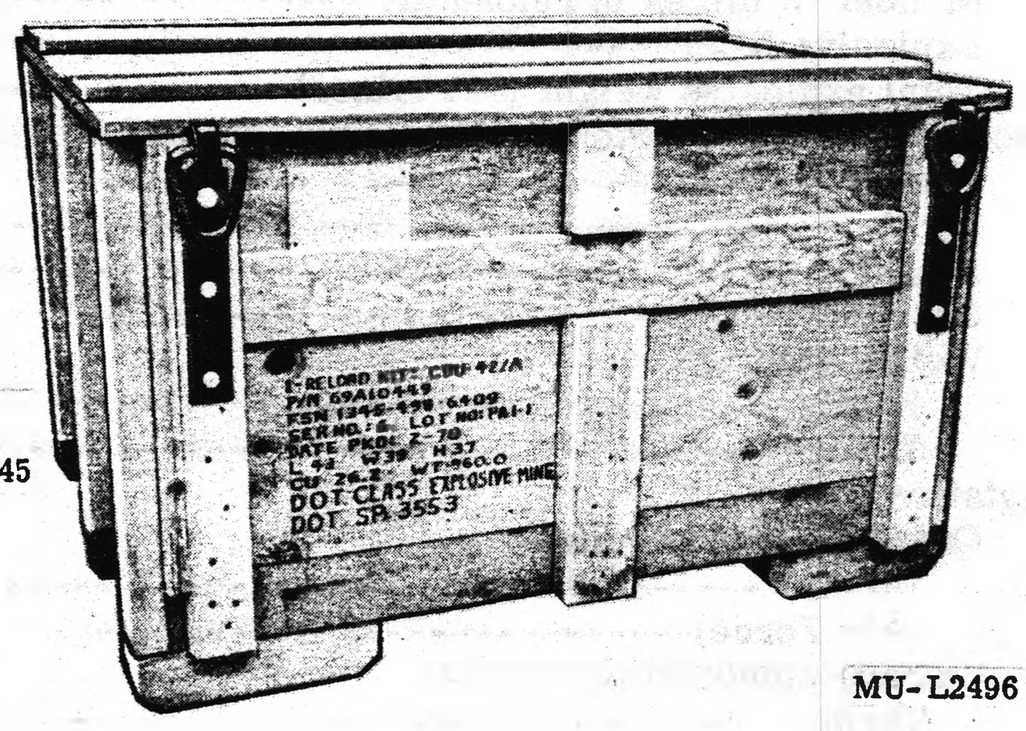

WOODEN SHIPPING
& STORAGE CONTAINER
9226267 MODIFIED BY 9248145

MU-L2496

Federal Item Identification	FSN
RELOAD KIT: CBU-42/A	1345-498-6409
MINE CLUSTER, ANTIPERSONNEL: CDU-20/B	None
MINE: BLU-54/B	None
WOODEN SHIPPING AND STORAGE CONTAINER 9226267 MODIFIED BY 9248145	8140-936-8241

GENERAL

The CBU-42/A reload kit consists of 10 antipersonnel mine clusters CDU-20/B. Each mine cluster contains 54 mines BLU-54/B. The kit is utilized for field reload of empty SUU-38/A dispensers cluminating in all-up CBU-42/A munitions. Also included in the CBU-42/A reload kit are all other necessary components for reload, including pressure cartridges and small metal parts.

The mine BLU-54/B is an antipersonnel fragmentation mine. The external appearance is spherical with protruding wind vanes. The fuze assembly is an electro-mechanical device. When the BLU-54/B is ejected from the canister, air pressure causes spin which, in turn, initiates an electric current within.

The shipping and storage container 9226267 was originally designed for another reload system. It has been adapted to CBU-42/A by modification drawing 9248145. The container is wooden and is not sealed. The antipersonnel mine clusters are therefore packed in barrier bags. For shipping and storage purposes, two containers may be strapped together.

CHARACTERISTICS

Mine Cluster, Antipersonnel: CDU-20/B

Length	14. 3 in.
Width	6. 14 in.
Height (long studs)	15. 46 in.
(short studs)	15. 16 in.
Weight (loaded) (approx)	75 lb

Mine: BLU-54/B

Diameter (excluding wind vanes)	2 3/8 in.
Weight (approx)	1 lb
Number of mines in reload kit	540
Explosive filler	Comp B
Total explosive weight (540 mines)	88. 33 lbs

Wooden Shipping and Storage Container 9226267 modified by 9248145

Length	43 in.
Width	39 in.
Height	27 in.
Cube	26. 2 cu ft
Weight (approx)	
Empty	200 lbs
Loaded	960 lbs

Logistics

Quantity distance class	
(Army)	7
(Air Force)	5M
Storage compatability group	
(Army)	A
(Air Force)	G
DOT shipping class	Explosive A
DOT shipping designation	Explosive Mine

WARHEAD SECTION, GUIDED MISSILE, HE, AGM-12E

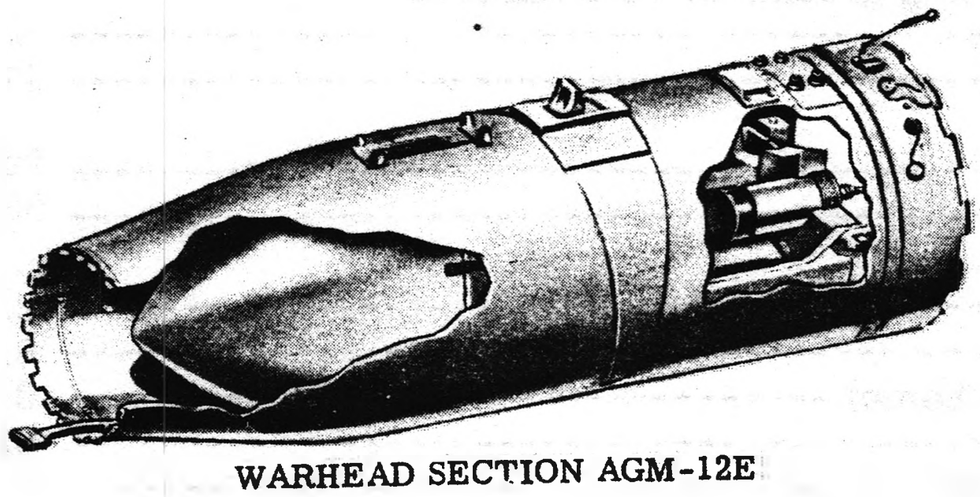

WARHEAD SECTION AGM-12E

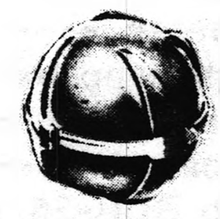

BOMB BLU-26/B
BOMB BLU-36/B

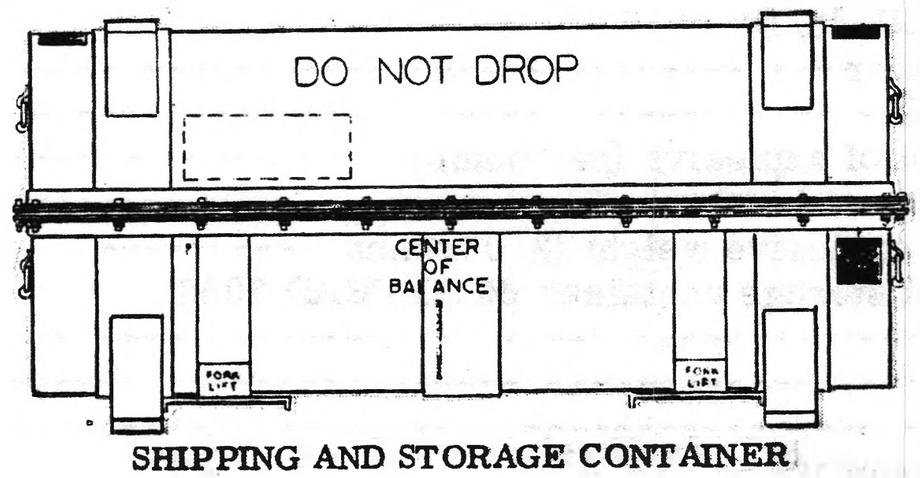

SHIPPING AND STORAGE CONTAINER

MU-L2265

Federal Item Identification	FSN
WARHEAD SECTION, GUIDED MISSILE, HE, AGM-12E (CONTAINS BOMBS BLU-26/B AND BLU-36/B)	1336-344-4485
BOMB, FRAG: BLU-26/B	1325-916-2227
BOMB, FRAG: BLU-36/B	1325-933-4957
BULLPUP METAL PARTS AND DET CORD ASSY	None
CONTAINER, SHIPPING AND STORAGE	8140-869-7541

GENERAL

The missile is a pilot-controlled, air-to-ground, short range, propelled missile that is used to destroy surface targets whose size, importance or tactical disposition requires highly accurate delivery of a warhead.

Normally mounted on aircraft, the missile is used to destroy airfields, ammunition dumps, bridges, gun emplacements, maintenance facilities, railroad yards, ships, tanks, troop concentrations, and similar types of targets.

The missile is comprised of three sections, namely -- the forward body section which contains the fuze triggering device and the guidance and control equipment, the center body section which contains the fuze and cargo, and the aft body section which contains the packaged thrust unit.

The bombs BLU-26/B and BLU-36/B are spin-armed, self-dispersing, fragmenting submunitions. The BLU-26/B detonates upon impact. The BLU-36/B detonates at the end of a variable delay. When the bombs explode, they produce a large number of small, high-velocity fragments.

Each warhead center section contains a minimum of 620 bombs BLU-26/B and 210 bombs BLU-36/B.

The shipping and storage container, a sealed steel container holding one warhead center section, is used for all transporation and storage.

CHARACTERISTICS

Bullpup metal parts and detonating ground network assembly:	
Length	59.67
Diameter	17.312
Weight (approx):	
Empty	200 lb
Loaded	930 lb
Bomb BLU-26/B:	
Diameter	2.78 in.
Weight	0.95 lb
Weight of explosive (per bomb)	0.183 lb
Number of bombs	620
Total explosive weight (620 bombs)	113.5 lb
Bomb BLU-36/B:	
Diameter	2.78 in.
Weight	0.95 lb
Weight of explosive (per bomb)	0.183 lb
Number of bombs	210
Total explosive weight (210 bombs)	38.5 lb
Shipping and storage container 64 AFPEAD 7065:	
Length	70 in.
Width	28 in.
Height	32 in.
Weight (approx):	
Empty	420 lb
Loaded	1350 lb
Cube	36
Center of gravity from aft end	35.10
Stacking height	4 containers
Logistics:	
Quantity-distance class	Not Available
Storage compatability group	Not Available
DOT shipping class	Not Available
DOT shipping designation	Explosive projectile
Coast Guard classification	----------
Aircraft speed range	Not Available
Bomb pattern dimensions	Not Available

WARHEAD SECTION, GUIDED MISSILE, HE, AGM-12E

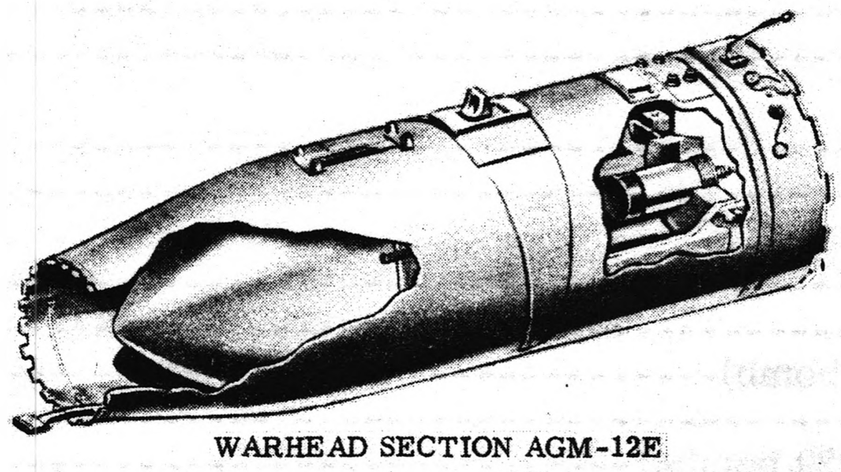

WARHEAD SECTION AGM-12E

BOMB BLU-26/B
BOMB BLU-59/B

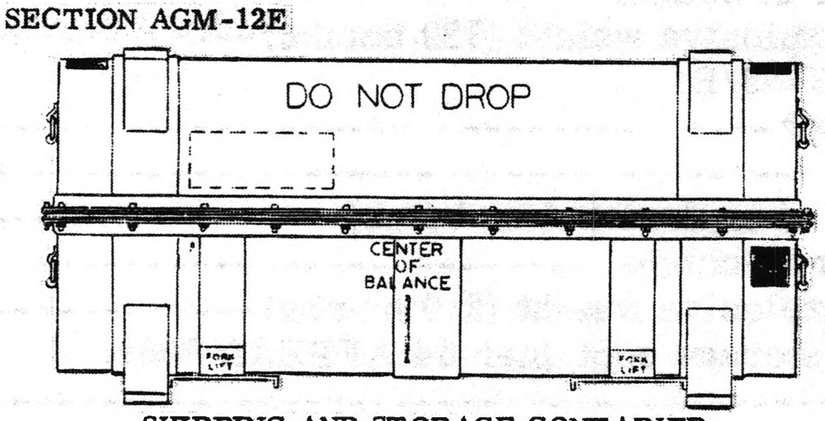

SHIPPING AND STORAGE CONTAINER

MU-L2264

Federal Item Identification	FSN
WARHEAD SECTION, GUIDED MISSILE, HE, AGM-12E (CONTAINS BOMBS BLU-26/B AND BLU-59/B)	1336-104-0184AQ
BOMB, FRAG: BLU-26/B	1325-916-2227
BOMB, FRAG: BLU-59/B	None
BULLPUP METAL PARTS AND DET CORD ASSY	None
CONTAINER, SHIPPING AND STORAGE	8140-869-7541

GENERAL

The missile is a pilot-controlled, air-to-ground, short range, propelled missile that is used to destroy surface targets whose size, importance or tactical disposition requires highly accurate delivery of a warhead.

Normally mounted on aircraft, the missile is used to destroy airfields, ammunition dumps, bridges, gun emplacements, maintenance facilities, railroad yards, ships, tanks, troop concentrations, and similar types of targets.

The missile is comprised of three sections, namely -- the forward body section which contains the fuze triggering device and the guidance and control equipment, the center body section which contains the fuze and cargo, and the aft body section which contains the packaged thrust unit.

The bombs BLU-26/B and BLU-59/B are spin-armed, self-dispersing, fragmenting submunitions. The BLU-26/B detonates upon impact. The BLU-59/B detonates at the end of a variable delay. When the bombs explode, they produce a large number of small, high-velocity fragments.

Each warhead center section contains a minimum of 620 bombs BLU-26/B and 210 bombs BLU-59/B.

The shipping and storage container, a sealed steel container holding one warhead center section, is used for all transportation and storage.

CHARACTERISTICS

Bullpup metal parts and detonating ground network assembly:	
Length	59.67 in.
Diameter	17.312 in.
Weight (approx):	
Empty	200 lb
Loaded	930 lb
Bomb BLU-26/B:	
Diameter	2.78 in.
Weight	0.95 lb
Weight of explosive (per bomb)	0.183 lb
Number of bombs	620
Total explosive weight (620 bombs)	113.5 lb
Bomb BLU-59/B:	
Diameter	2.78 in.
Weight	0.95 lb
Weight of explosive (per bomb)	0.183 lb
Number of bombs	210
Total explosive weight (210 bombs)	38.5 lb
Shipping and storage container 64 AFPEAD 7065:	
Length	70 in.
Width	28 in.
Height	32 in.
Weight (approx):	
Empty	420 lb
Loaded	1350 lb
Cube	36 cu ft
Center of gravity from aft end	35.10 in.
Stacking height	4 containers
Logistics:	
Quantity-distance class	Not Available
Storage compatability group	Not Available
DOT shipping class	Not Available
DOT shipping designation	Explosive Projectile
Coast Guard classification	Not Available
Aircraft speed range	Not Available
Bomb pattern dimensions	Not Available